TO:

SUPERSEDED BY EI 77-031
EFFECTIVE 5/1/1977

M. Tegza
Final Plans Review Bur.
Bldg. 5 4th Fl.
/2 Copies/

ENGINEERING INSTRUCTION

NEW YORK STATE DEPARTMENT OF TRANSPORTATION

SUBJECT: STANDARD DETAILS FOR HIGHWAY BRIDGES, REVISIONS TO

Subject Code: 7.35-11

Distribution: ☐ Main Office ☐ Regions ☒ Special

Code: EI 76-52

Date: 7/16/76

Supersedes:
EI 74-082 DATE 8/27/74
EI 75-030 DATE 4/21/75
EI 76-009 DATE 1/14/76

APPROVED: E. V. Hourigan
Deputy Chief Engineer (Structures)

The attached pages are to be inserted under Guide Line Drawings in the Manual.

GLD-PC7	Added	Framing Plan and Details for Prestressed I Beams
GLD-PC8	Added	Transverse Section and Details for Prestressed I Beams
GLD-PC9	Added	Prestressed Concrete I Beam Details
GLD-PC10	Added	Miscellaneous Details for Prestressed I Beams
GLD-A1	Revised	Abutment Plan and Elevation Spread Footing for Skew 30° and Under
GLD-A2	Revised	Abutment Sections Reinforcement Details for Skew 30° and Under
GLD-A3	Revised	Pedestals and Overlays for Skew 30° and Under
GLD-A4	Revised	Abutment Plan and Elevation on Piles for Skew 30° and Under
GLD-A6	Revised	Abutment Sections Reinforcement Details for Skew 30° and Under
GLD-A7	Revised	Miscellaneous Abutment Details
GLD-A7a	Revised	Miscellaneous Abutment Details (Continued)
GLD-A9	Revised	Abutment Sections - Reinforcement Details for Skews Over 30°
GLD-A10	Revised	Flared Wingwall Abutment - Plan and Elevation on Piles
GLD-A11	Revised	Flared Wingwall Abutment - Footing Plan and Sections
GLD-A12	Revised	Flared Wingwall Abutment - Reinforcement Plans and Sections
GLD-G1	Revised	Welded Plate Girder Details and Tables
GLD-G2	Revised	Welded Plate Girder Tables
GLD-G3	Revised	Welded Plate Girder Details - Straight Girder
GLD-G5	Revised	Moment-Shear and Camber Tables Continuous Welded Plate Girder
GLD-G6	Revised	Framing Plan and Bottom Lateral Connections - Curved Girder
GLD-G7	Revised	Welded and Girder Details - Curved Girder
GLD-MB1	Revised	Curved Bridge Layout and Open Wingwall Elevation
GLD-MC1	Revised	Fascia and Haunch Details
GLD-MS1	Revised	Miscellaneous Welded Plate Girder Details
GLD-P1	Revised	Solid Pier on Piles
GLD-PC1	Revised	Fascia Details - Sidewalks, Parapets and Curbs, Prestressed Box Units
GLD-PC2	Revised	Transverse Section and Superstructure Plan
GLD-PC3	Revised	Prestressed Concrete - Box Beam Details
GLD-PC4	Revised	Prestressed Concrete - Box Beam Details (Continued)
GLD-PC5	Revised	Miscellaneous Details for Prestressed Concrete Boxes
GLD-PC6	Revised	Box Beam and Anchor Rod Details
GLD-S1	Revised	Transverse Section - Framing Plan for Skew 30° and Under
GLD-S2	Revised	Slab Reinforcement for Skew 30° and Under
GLD-S3	Revised	Framing Plan and Slab Reinforcement for Skews over 30°
GLD-S4	Revised	Transverse Section and Slab Reinforcement - Curved Structure

FED. RD. REG. NO.	STATE	FEDERAL AID PROJECT NO.	SHEET NO.	TOTAL SHEETS
	NEW YORK			

FOR USE AS A GUIDE ONLY

CAPITAL PROJECT IDENTIFICATION NO.

Designer / Detailer
Please note that all diaphragms are placed parallel to the skew.
If all azimuths of ℄ of bearings and skew angles are the same, only show one angle and one azimuth, labeled typical.
There are no diaphragms at the continuous ends of beams at pier.
For simple spans at piers the detail is similar to abutment end. See below.

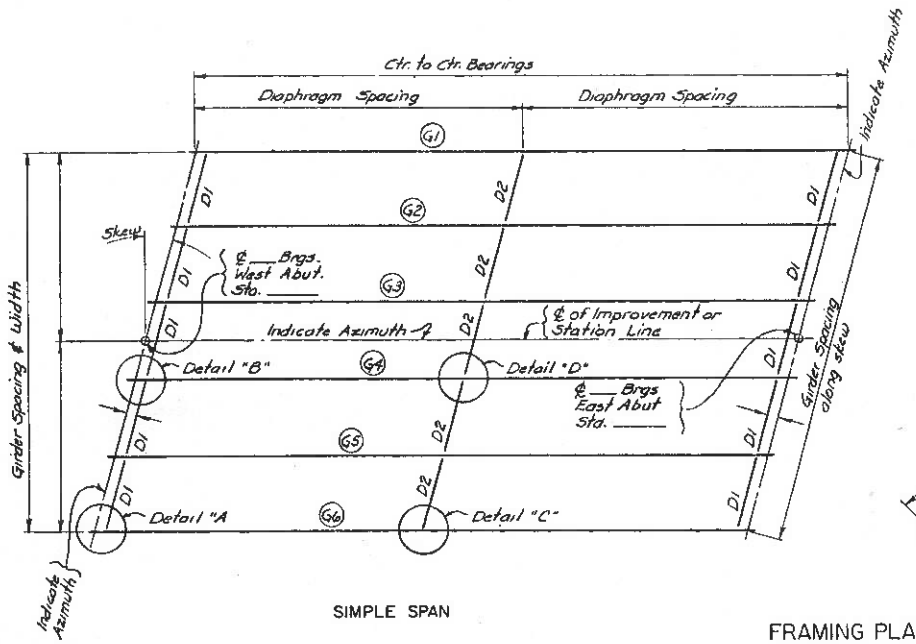

SIMPLE SPAN

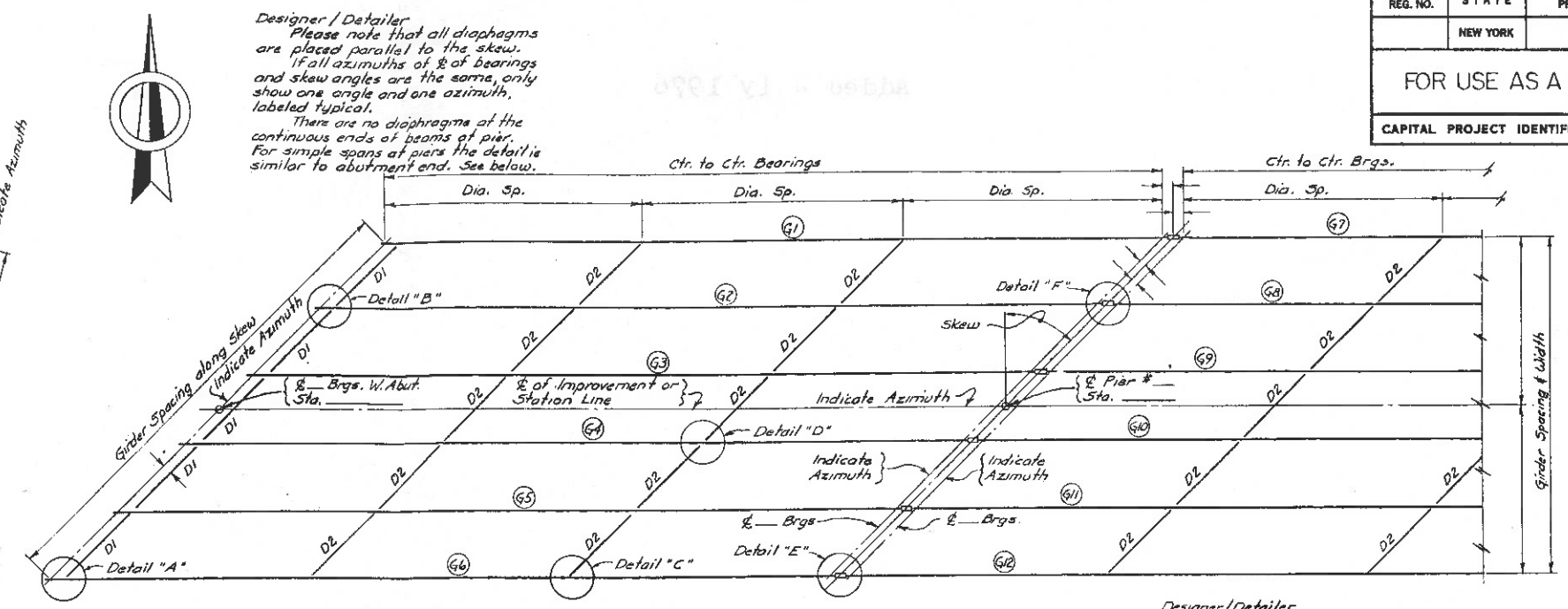

CONTINUOUS SPANS

Designer/Detailer
Spacing of Diaphragms
No Intermediate Diaphragms on spans up to 40'.
Midspan Diaphragms for spans greater than 40' and up to 80'.
Diaphragms at the third points for spans greater than 80'.

FRAMING PLANS FOR PRESTRESSED I BEAMS
Scale ⅛"=1'-0"

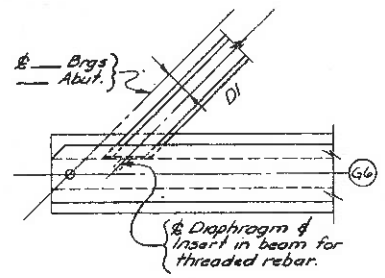

DETAIL "A"

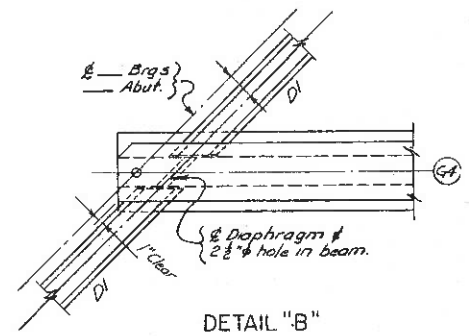

DETAIL "B"

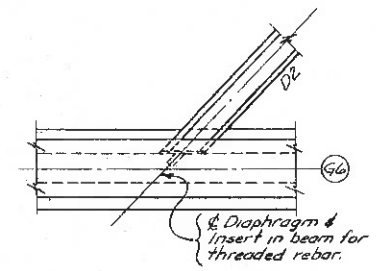

DETAIL "C"

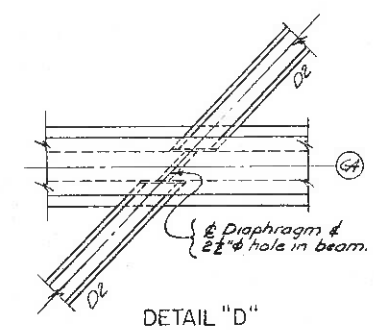

DETAIL "D"

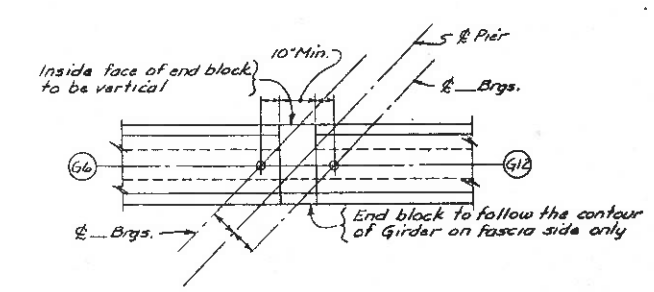

DETAIL "E"

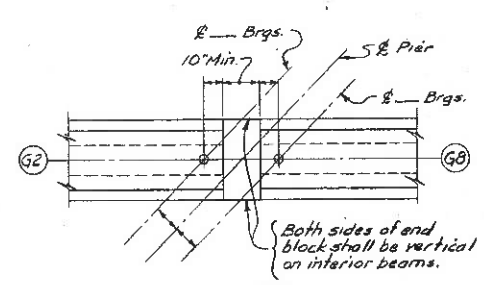

DETAIL "F"

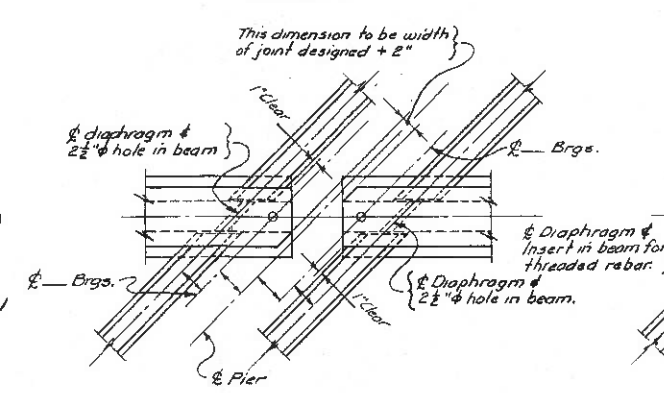

INTERIOR GIRDERS AT PIER

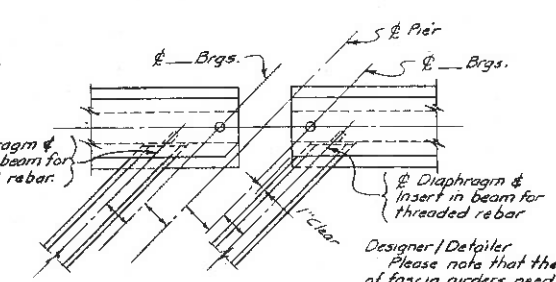

FASCIA GIRDERS AT PIERS

Designer / Detailer
Please note that the top flange of fascia girders need not be clipped on the outside.

DIAPHRAGM CONNECTIONS AT PIER FOR SIMPLE SPANS

Notes:
For Beam End Detail see GLD-PC 10.
Threaded Inserts in Girders shall be Structural Connection Inserts (Coil Thread).

DATE MADE .....
PROJECT ENGINEER .....
IN CHARGE OF .....
DESIGNED BY .....
DESIGN CHECKED BY .....
DETAILED BY .....
DETAIL CHECKED BY .....

STATE OF NEW YORK
DEPARTMENT OF TRANSPORTATION
DIVISION OF CONSTRUCTION

SAMPLE DETAIL — SUPERSTRUCTURE

FRAMING PLAN AND DETAILS FOR PRESTRESSED I BEAMS

SIMPLE SPANS
CONTINUOUS SPANS

DRAWING NO. GLD-PC 7

ADDED JULY 1976

FED. RD. REG. NO.	STATE	FEDERAL AID PROJECT NO.	SHEET NO.	TOTAL SHEETS
	NEW YORK			

FOR USE AS A GUIDE ONLY

CAPITAL PROJECT IDENTIFICATION NO.

Detailer: All reinforcement to be verified by designer.

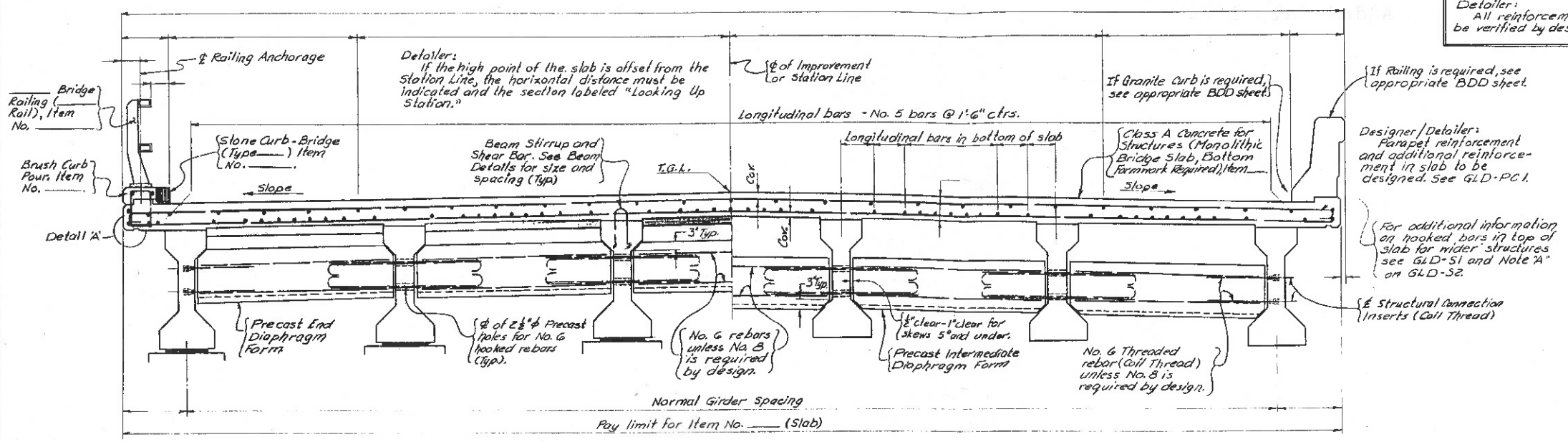

END DIAPHRAGMS - D1

INTERMEDIATE DIAPHRAGMS - D2

TRANSVERSE SECTION
Scale: ½" = 1'-0"

Contractor Note: Precast Diaphragm forms are indicated but the Contractor may elect to use cast-in-place diaphragms. If cast-in-place diaphragms are to be used, details of these drawings must be submitted to the Deputy Chief Engineer (Structures) for approval.

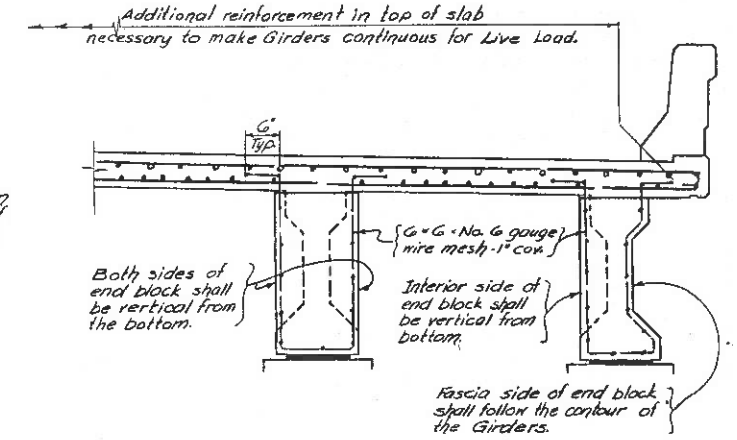

PARTIAL SECTION-BEAM CONNECTIONS FOR CONTINUOUS SPANS
Scale: ¾" = 1'-0"

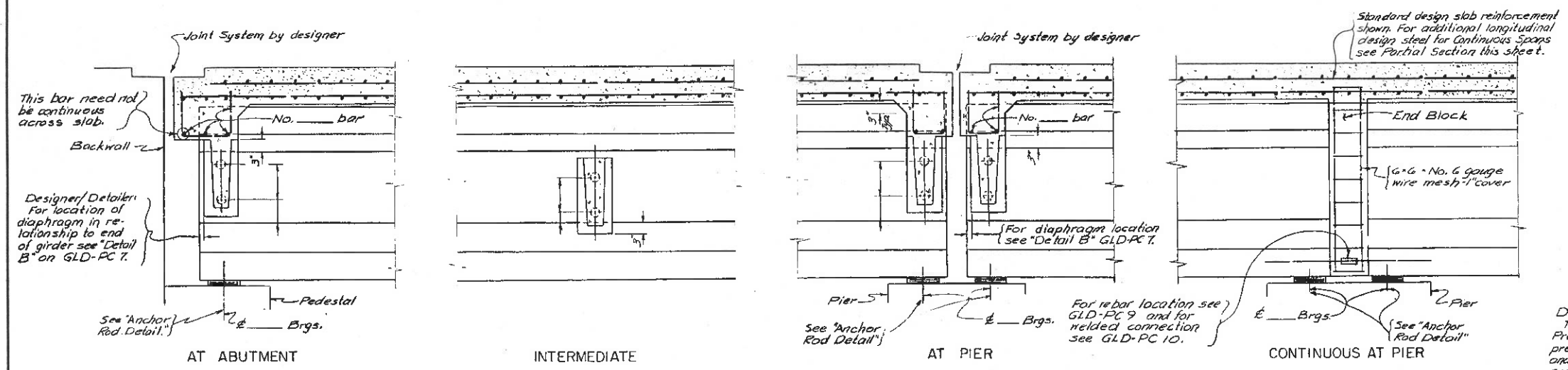

AT ABUTMENT

INTERMEDIATE

AT PIER

CONTINUOUS AT PIER

LONGITUDINAL SECTION
Scale: ¾" = 1'-0"

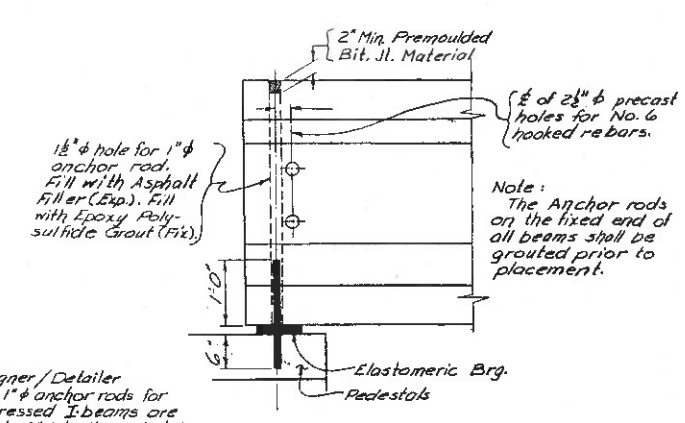

ANCHOR ROD DETAIL
Scale: ¾" = 1'-0"

DIAPHRAGM TABLE	
BEAM TYPE	DEPTH
I	1'-1"
II	1'-5"
III	1'-9"
IV	2'-1"
V	2'-11"
VI	3'-8"

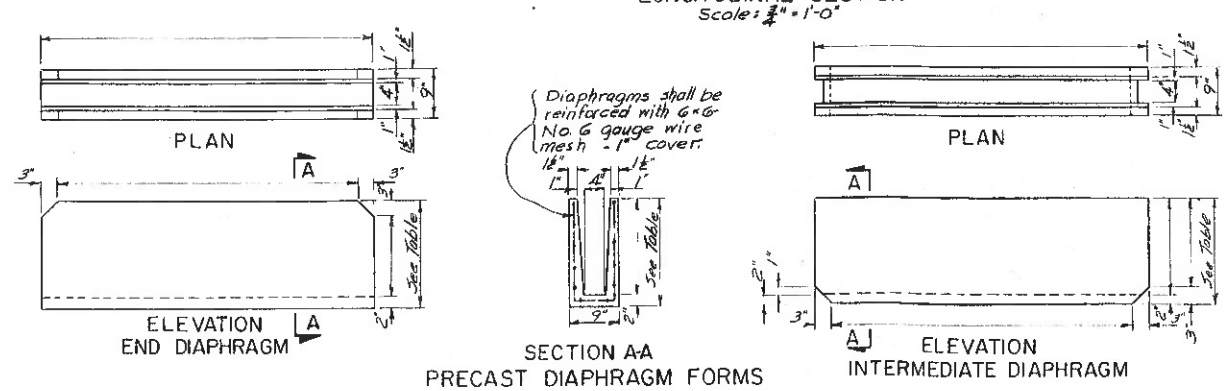

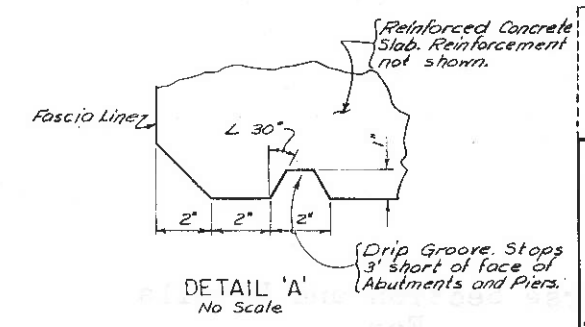

DETAIL 'A'
No Scale

This area reserved for notes

DATE MADE
PROJECT ENGINEER
IN CHARGE OF
DESIGNED BY
DESIGN CHECKED BY
DETAILED BY
DETAIL CHECKED BY

STATE OF NEW YORK
DEPARTMENT OF TRANSPORTATION
DIVISION OF CONSTRUCTION

SAMPLE DETAIL - SUPERSTRUCTURE

TRANSVERSE SECTION AND DETAILS FOR PRESTRESSED I-BEAMS

SIMPLE SPANS
CONTINUOUS SPANS

DRAWING NO. GLD-PC 8

ADDED JULY 1976

FED. RD. REG. NO.	STATE	FEDERAL AID PROJECT NO.	SHEET NO.	TOTAL SHEETS
	NEW YORK			

FOR USE AS A GUIDE ONLY

CAPITAL PROJECT IDENTIFICATION NO.

All reinforcement to be verified by designer.

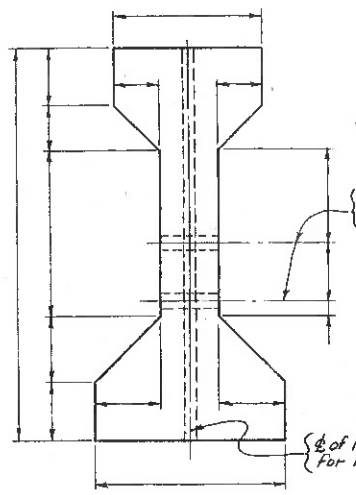

TYPICAL SECTION
Scale 1"=1'-0"

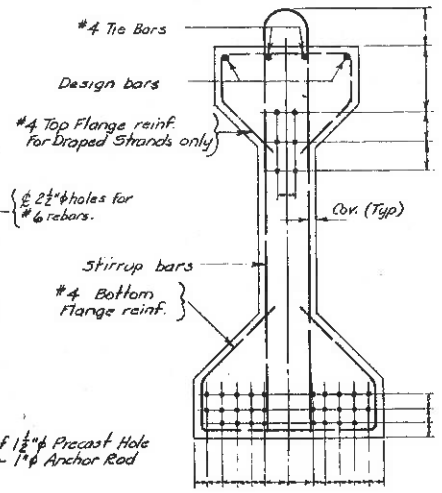

DRAPED STRANDS
SECTION A–A
Scale 1"=1'-0"

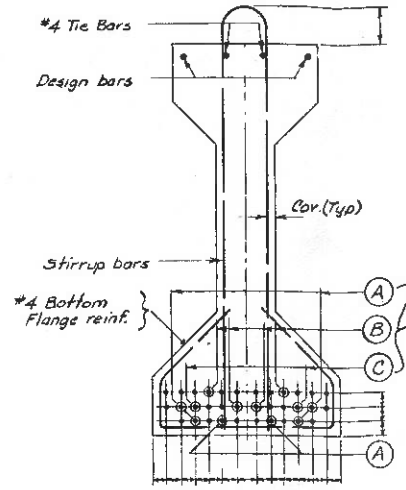

BLANKETED STRANDS
SECTION A–A
Scale 1"=1'-0"

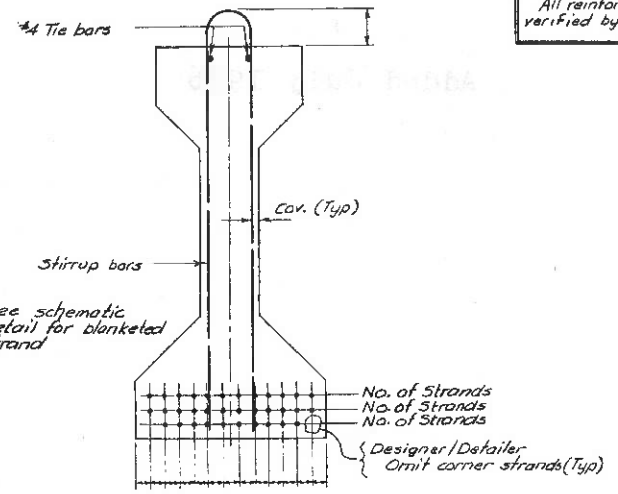

SECTION B-B
Scale 1"=1'-0"

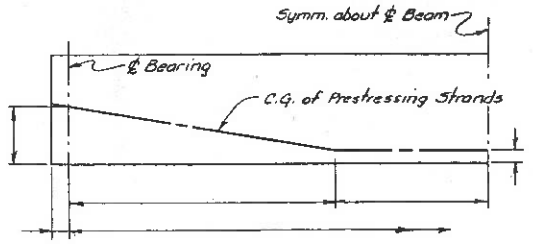

SCHEMATIC DETAIL FOR DRAPED STRANDS
Not to Scale

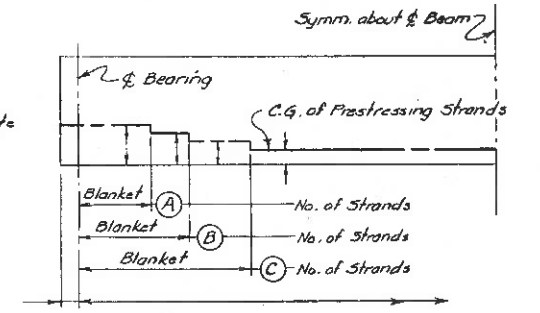

SCHEMATIC DETAIL FOR BLANKETED STRANDS
Not to Scale

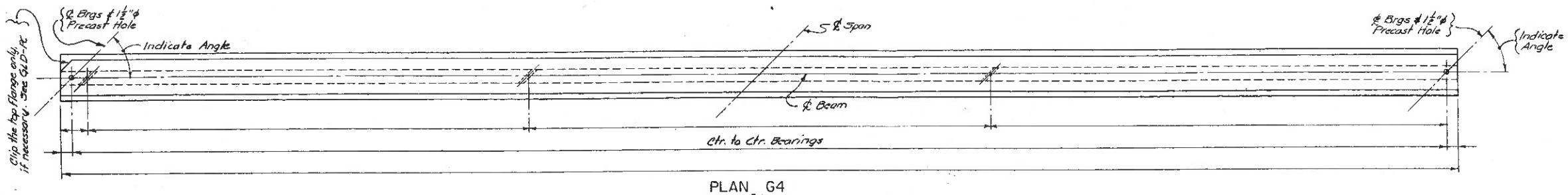

PLAN G4
Scale ⅜"=1'-0"

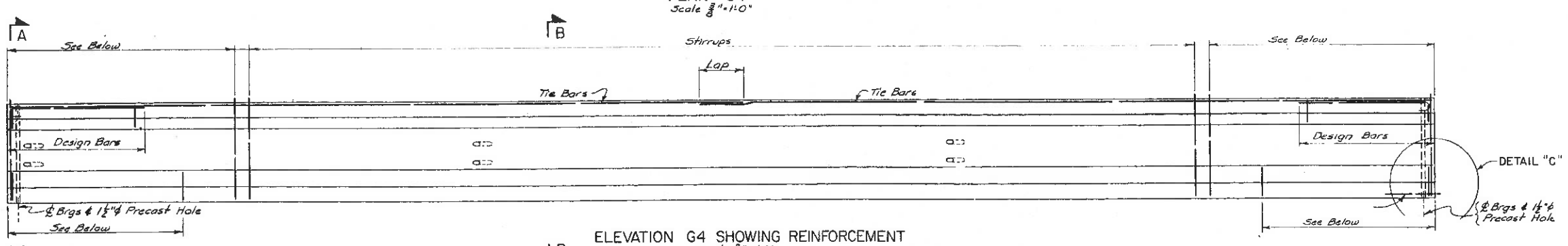

ELEVATION G4 SHOWING REINFORCEMENT
Scale ⅜"=1'-0"

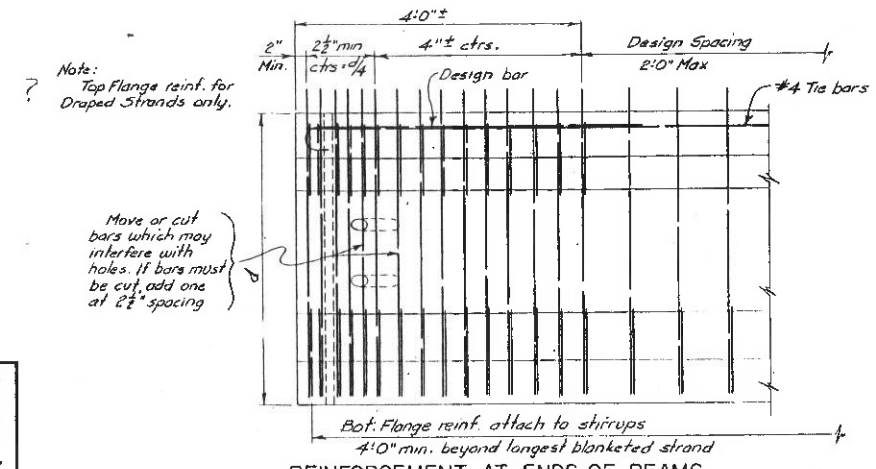

Note:
? Top Flange reinf. for Draped Strands only.

REINFORCEMENT AT ENDS OF BEAMS
Scale ¼"=1'-0"

Designer/Detailer
Continuity reinf. is shown in two locations for the purpose of giving alternates. The exact number of bars and there location is a design function.
If it is absolutely necessary to use a full strand pattern, location "A" would probably be used for these bars.
If a full pattern is not used, it may be possible to locate these bars within the strand pattern as shown (Location "B")
It is also possible to use a combination of both locations.

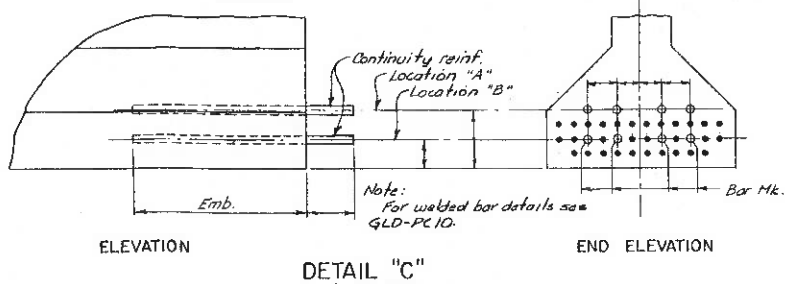

DETAIL "C"
Scale 1"=1'-0"

Designer/Detailer:
The bar list for each prestressed beam shall be placed on that beam sheet. All bar reinforcement embedded in or protruding from the prestressed beams shall be included in prestressed beam item.

Notes
The prestressing strands shall be ½" diameter with a guaranteed ultimate strength of 270 ksi.
ψ-Jacking force = _____ lbs. per strand.
Required min. conc. strength at transfer = _____ psi
Required min. conc. strength at 28 days = _____ psi
The allowable tension in the prestressed concrete units – At transfer = _____ $\sqrt{f'_{ci}}$ psi
At 28 day strength = _____ $\sqrt{f'_c}$ psi
Downward deflection under dead load (slab) _____.
Downward deflection under dead load (superimposed) _____.
Upward camber at transfer due to prestress force and beam dead load.
All exposed corners, except the top, shall be chamfered 3/4 inch.
All temporary inserts shall be approved by the Deputy Chief Engineer (Structures) and detailed on the prestressed concrete "Working Drawings."
Bar reinforcement shall be ASTM A615, Grade 40, except where design requires Grade 60.

The tops of prestressed units shall receive a stiff wire rake finish.

Designer:
* Force shall be to the nearest 100# and the same for all prestressed units in a bridge, when possible.

DATE MADE.....
PROJECT ENGINEER.....
IN CHARGE OF.....
DESIGNED BY.....
DESIGN CHECKED BY.....
DETAILED BY.....
DETAIL CHECKED BY.....

STATE OF NEW YORK
DEPARTMENT OF TRANSPORTATION
DIVISION OF CONSTRUCTION

SAMPLE DETAIL – SUPERSTRUCTURE

PRESTRESSED CONCRETE
I BEAM DETAILS

SIMPLE SPANS
CONTINUOUS SPANS

DRAWING NO. GLD-PC 9

ADDED JULY 1976

FED. RD. REG. NO.	STATE	FEDERAL AID PROJECT NO.	SHEET NO.	TOTAL SHEETS
	NEW YORK			

FOR USE AS A GUIDE ONLY

CAPITAL PROJECT IDENTIFICATION NO.

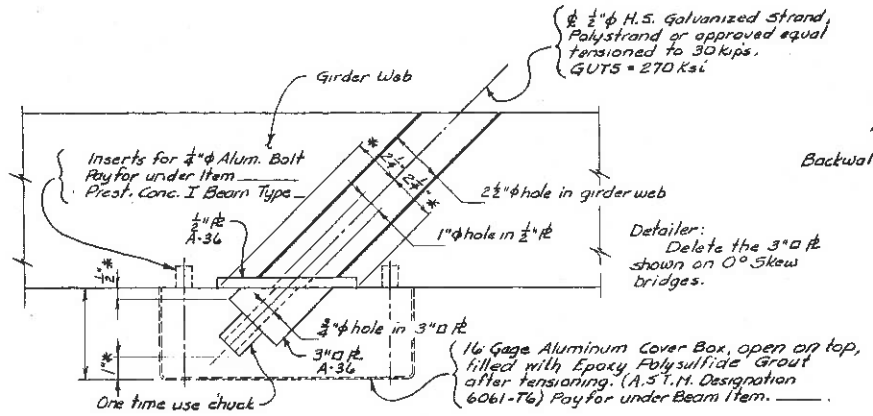

SECTION

Detailer:
The dimensions shown with an asterisk (*) are informational dimensions to be used for layout and need not be shown on the contract plans.

Note:
The ½" PL shown is to be cast in beam and the 3"□ PL to be welded to ½" PL some time prior to transverse tensioning.

Detailer:
Delete the 3"□ PL shown on 0° Skew bridges.

Designer/Detailer
Epoxy bearing pads may be necessary see GLD-PC5.

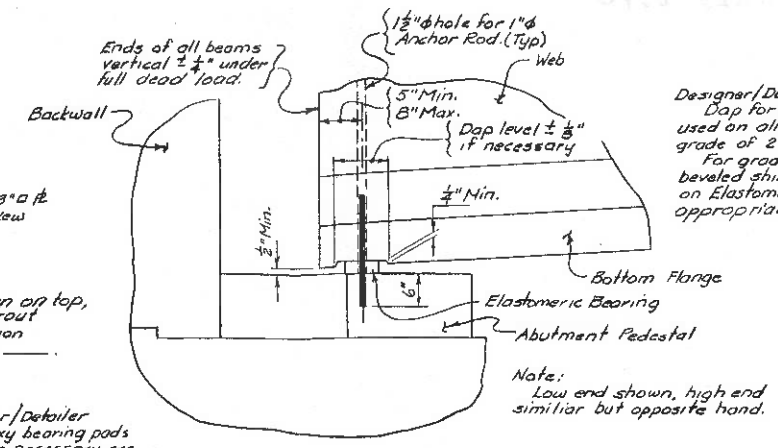

ELEVATION

Note:
Low end shown, high end similiar but opposite hand.

Designer/Detailer
Dap for bearing shall be used on all beams having a grade of 2% or more.
For grades over 4% beveled shim PL's will be used on Elastomeric Bearings. See appropriate BDD Sheet.

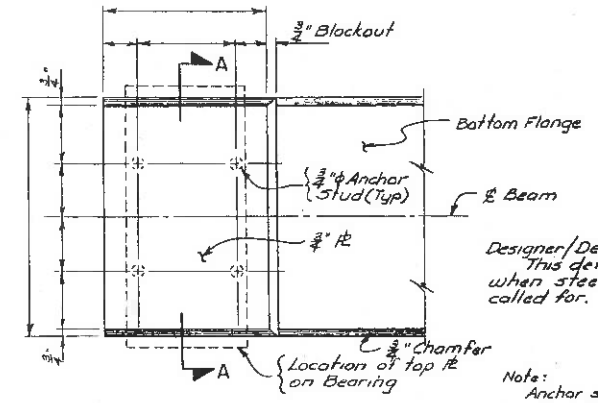

BOTTOM VIEW AT END OF BEAM

Designer/Detailer
This detail is to be used when steel bearings are called for.

Note:
Anchor studs shall meet the requirements listed in sub-section ____, Stud Shear Connectors.

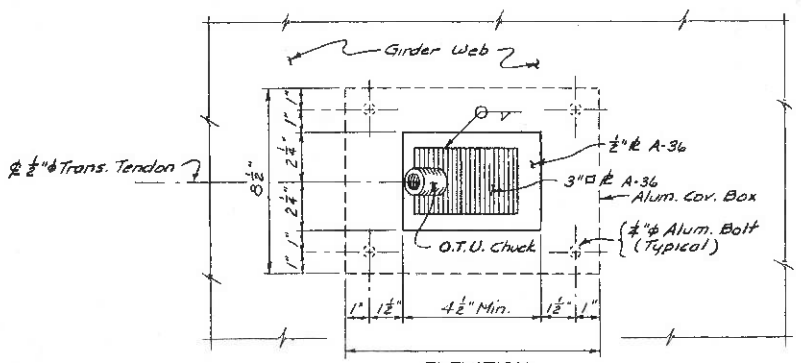

ELEVATION

TRANSVERSE TENDON DETAILS
Scale 3"=1'-0"

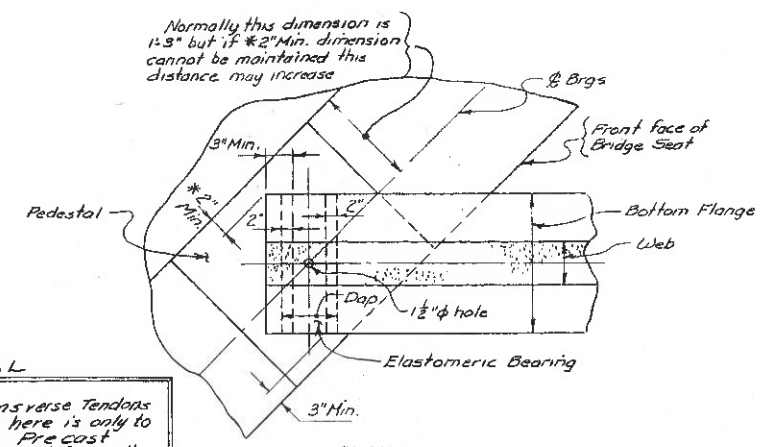

PLAN

BEARING PLACEMENT DETAILS
Not to Scale

SPECIAL

Designer/Detailer
The detail for Transverse Tendons for I-Beams shown here is only to be used when solid Precast Diaphragms are called for on the plans. Normally Precast Diaphragm Forms will be used and the Contractor will be given the option of Cast-in-place Diaphragms.

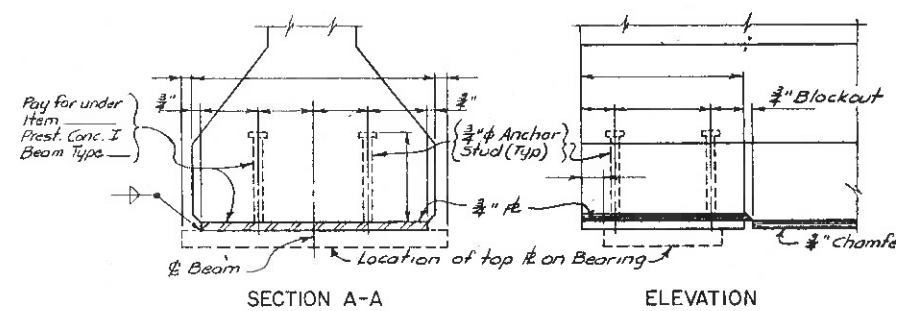

SECTION A-A ELEVATION

END PL FOR STEEL BEARING CONNECTION
Scale 1½"=1'-0"

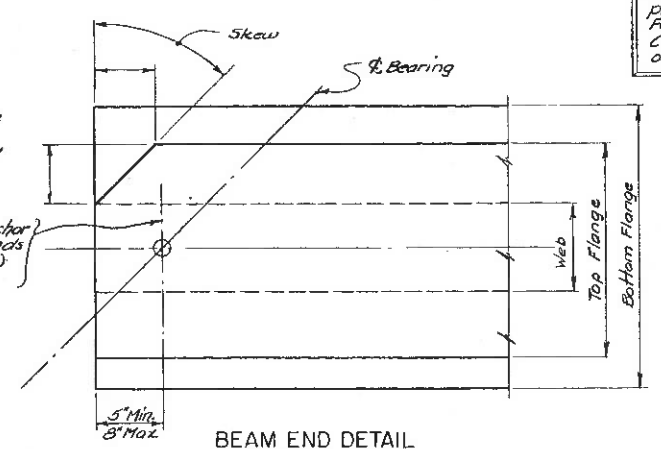

Designer/Detailer
Only the top flange of the beam is to be clipped when necessary to provide clearance for joint.

BEAM END DETAIL
Scale 1½"=1'-0"

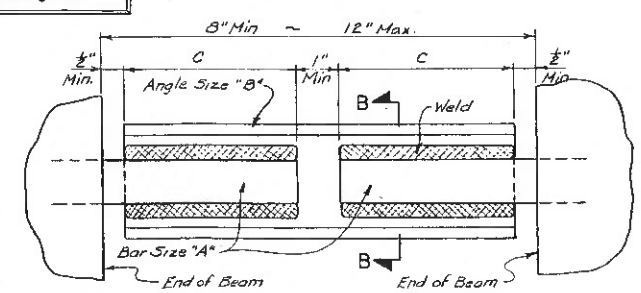

PLAN

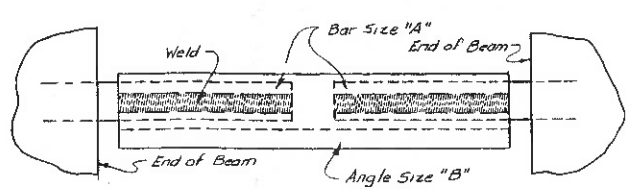

ELEVATION

WELDED BAR CONNECTION FOR CONTINUOUS BEAMS
Not to Scale

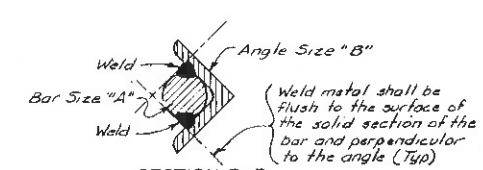

SECTION B-B

TABLE OF SIZES			
"A"	"B"	"C"	
#6 Bar	L 1¾"×1½"×5/16"	3"	
#8 Bar	L 2"×2"×¼"	4"	
#9 Bar	L 2"×2"×⅜"	4½"	

Notes:
Angles to be A-36.
Preheat to 400°F. min and weld with properly dried 5/32"ϕ-E7018 Electrodes.

This area reserved for notes

DATE MADE
PROJECT ENGINEER
IN CHARGE OF
DESIGNED BY
DESIGN CHECKED BY
DETAILED BY
DETAIL CHECKED BY

STATE OF NEW YORK
DEPARTMENT OF TRANSPORTATION
DIVISION OF CONSTRUCTION

SAMPLE DETAIL – SUPERSTRUCTURE

MISCELLANEOUS DETAILS FOR PRESTRESSED I-BEAMS

SIMPLE SPANS
CONTINUOUS SPANS

DRAWING NO. GLD-PC 10

ADDED JULY 1976

FED. RD. REG. NO.	STATE	FEDERAL AID PROJECT NO.	SHEET NO.	TOTAL SHEETS
	NEW YORK			

FOR USE AS A GUIDE ONLY

CAPITAL PROJECT IDENTIFICATION NO.

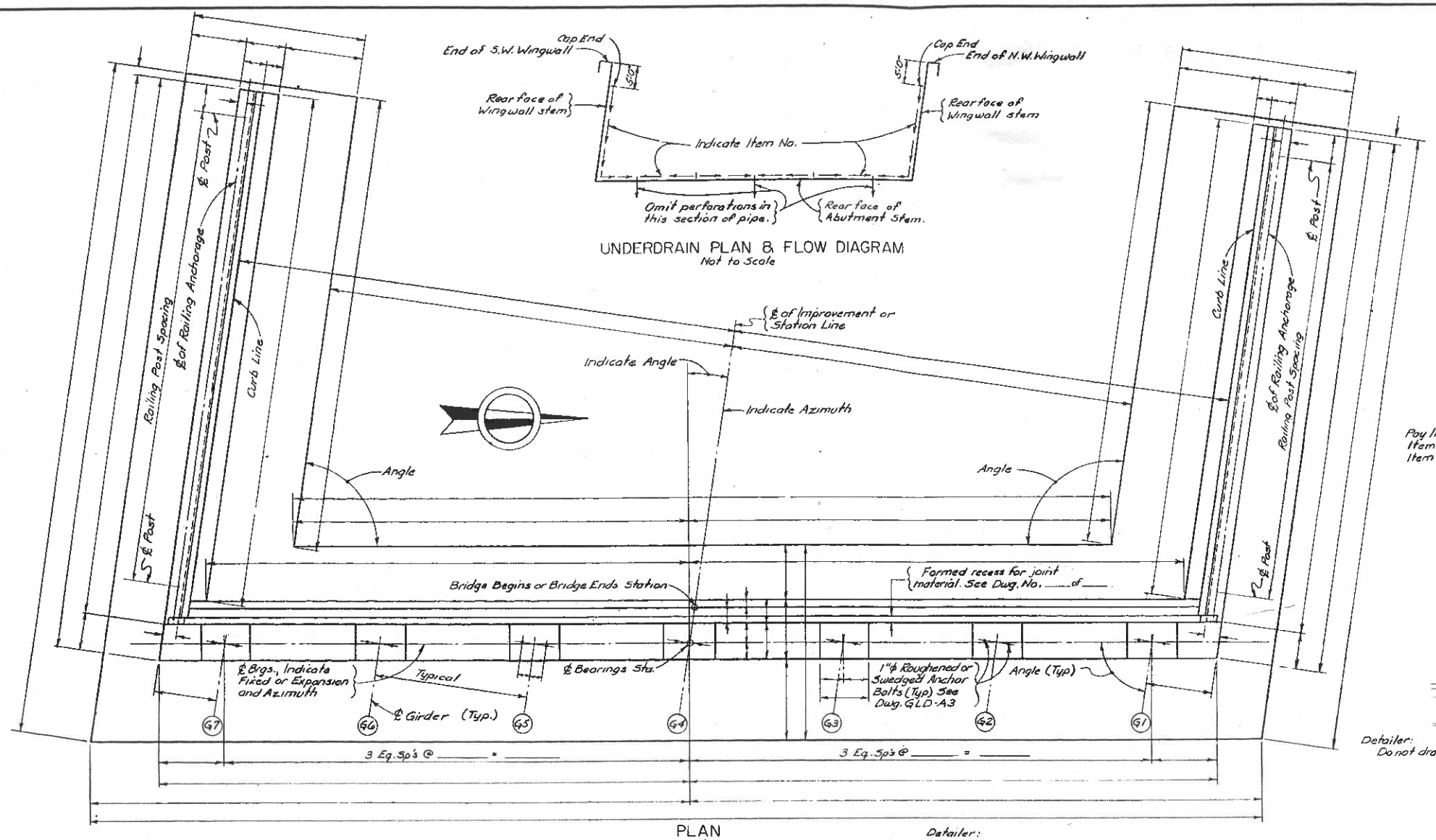

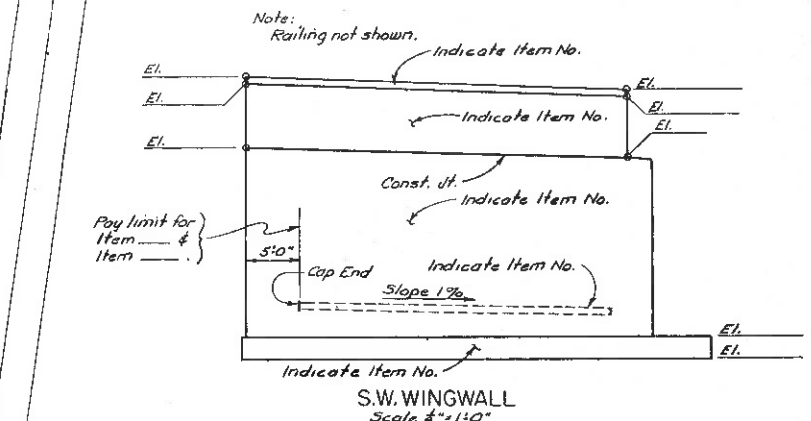

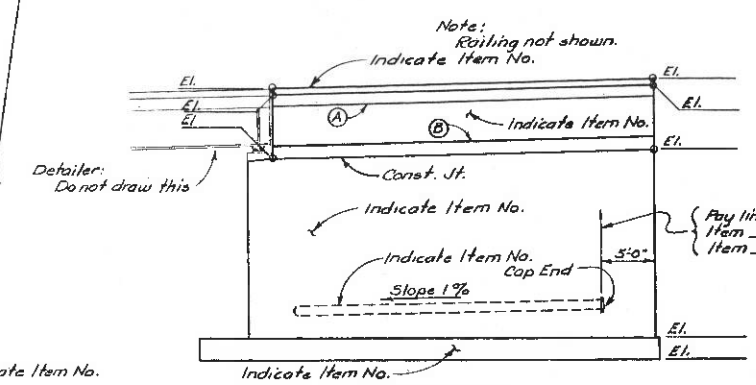

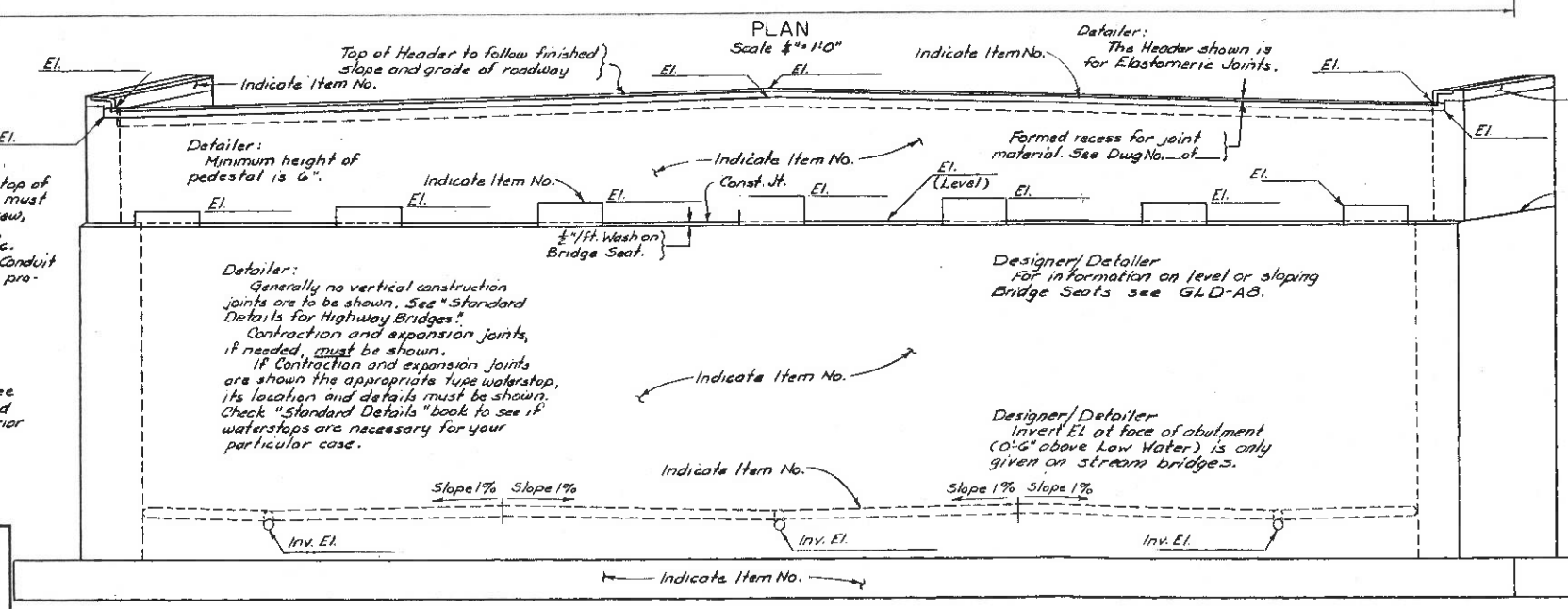

Designer/Detailer
The elevations of the top of the backwall and header must take into account the skew, vertical curve correction, horizontal curvature, etc.
Check to see if Utility Conduit or any openings must be provided in the abutment.

Squad Boss:
It is your responsibility to see that all the signatures are filled in correctly in the block below prior to submission to the Project Engineer for review.

Detailer:
Lines Ⓐ & Ⓑ above are "V" Groove lines used for aesthetically treating the face of wingwall. (Optional)
Ⓐ is a continuation of the bottom line of the superstructure slab as indicated.
Ⓑ is a continuation of the line of the bottom flange of the stringer.

Detailer:
If the abutment is on rock only the elevation of the top of footing is given and a footing thickness.

Notes:
This area on all drawings should be reserved for notes.
The suggested scale for any abutment plan and elevation is ¼" = 1'-0". The minimum scale is ⅛" = 1'-0". If a scale of ⅛" = 1'-0" is used it may be necessary to draw enlarged portions or Isometrics to clarify complicated or unclear details.
The minimum size of lettering shall be #4 on any standard lettering guide.
References:
For Railing Details see Dwg. # ___ of ___.
For Curb details see Dwg. # ___ of ___.
For Bearing details see Dwg. # ___ of ___.
For Underdrain Filter details see Dwg # ___ of ___
Don't forget note giving Foundation Pressure.

DATE MADE ____
PROJECT ENGINEER J. Gourdy
IN CHARGE OF G. Pagano
DESIGNED BY D. Ramos
DESIGN CHECKED BY V. Tagakovich
DETAILED BY Ron Nielsen
DETAIL CHECKED BY J. Dilday

This is only a sample.

STATE OF NEW YORK
DEPARTMENT OF TRANSPORTATION
DIVISION OF CONSTRUCTION

SAMPLE DETAIL — SUBSTRUCTURE

ABUTMENT PLAN AND ELEVATION
SPREAD FOOTING
FOR SKEW 30° & UNDER

DRAWING NO. GLD-A1

REVISED JULY 1976

FED. RD. REG. NO.	STATE	FEDERAL AID PROJECT NO.	SHEET NO.	TOTAL SHEETS
	NEW YORK			

FOR USE AS A GUIDE ONLY

CAPITAL PROJECT IDENTIFICATION NO.

CONCRETE TABLE			

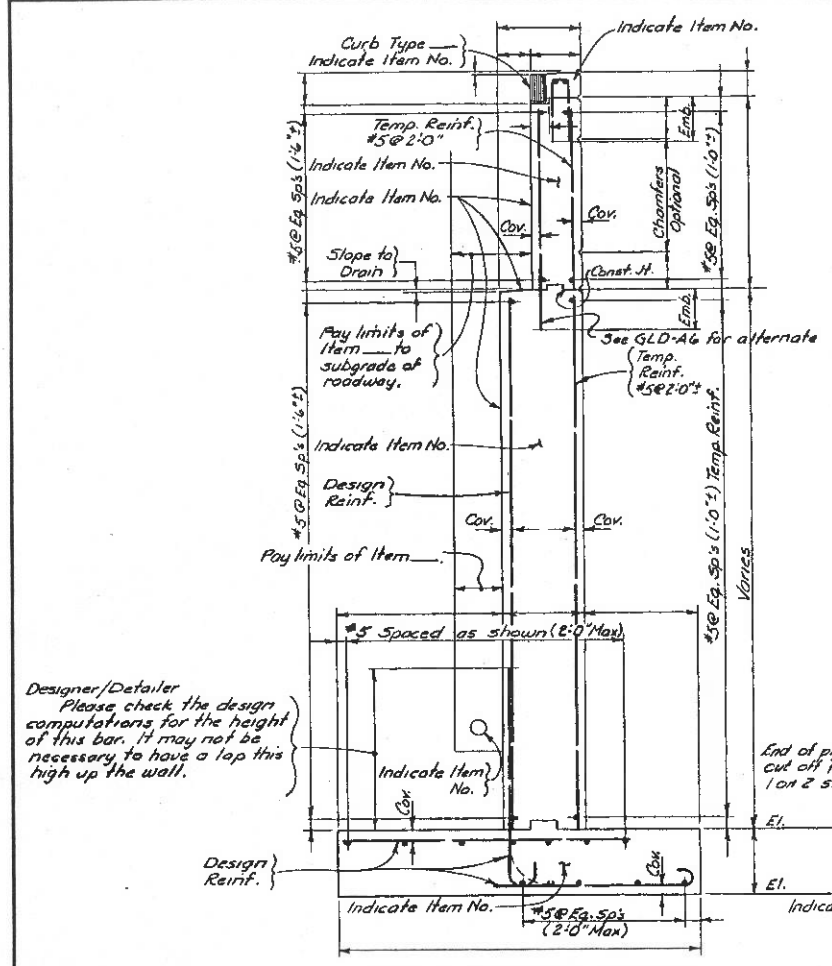

Designer/Detailer
Please check the design computations for the height of this bar. It may not be necessary to have a lap this high up the wall.

TYPICAL WINGWALL SECTION
Scale 3/8"=1'-0"

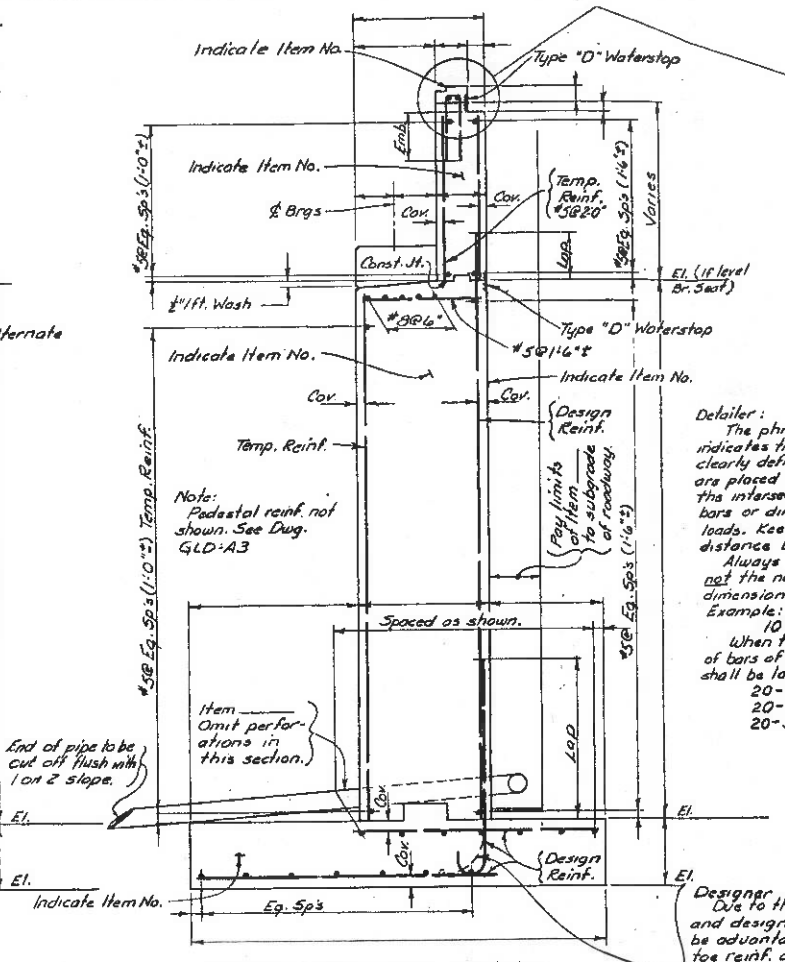

Note:
Pedestal reinf. not shown. See Dwg. GLD-A3

End of pipe to be cut off flush with 1 on 2 slope.

Detailer:
The phrase "Spaced as shown" indicates the reinforcing has no clearly defined spacing. The bars are placed at critical points, i.e. the intersection of 2 or more bars or directly under/over critical loads. Keep in mind the max. distance between bars is 2'-0".
Always give the number of bars not the number of spaces when dimensioning reinforcement.
Example:
10-SA 7 bars @ 1'-0"
When there is more than one row of bars of similar designation they shall be labeled
20-SA 7 bars @ 1'-0" 10 Top-10 Bot
20-SA 9 bars @ 1'-0" 10 Front-10 Rear
20-SA 4 bars @ 1'-0" 10 NS-10 FS

TYPICAL ABUTMENT SECTION
Scale 3/8"=1'-0"

Designer
Due to the size of the bar and design criteria, it may be advantageous to make the toe reinf. and dowel one bar. If this is the case follow the dotted line example. The longitudinal reinf. in toe must then be respaced.
The bend in the bar should be determined by design.

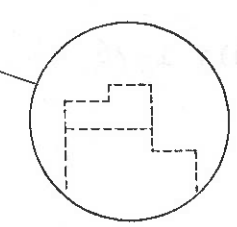

Detailer:
This insert is an ideal location for the header dimensions. Configuration and dimensioning is dependant on the type of joint material or joint system currently being used by this office and designated by bridge designer. See the appropriate BDD Sheet.

HEADER DETAILS
Scale 1"=1'-0"

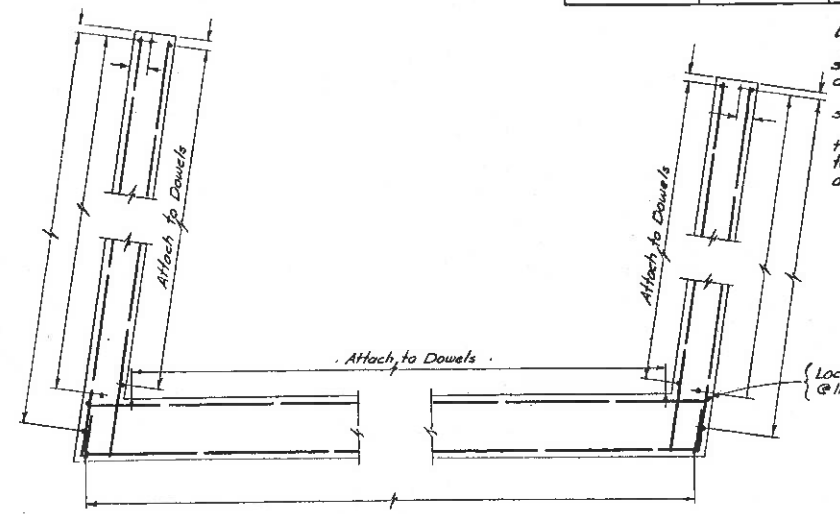

STEM REINFORCEMENT
Scale 3/16"=1'-0"

Detailer:
Concrete quantities shall be shown to nearest hundredth of a cubic yard.
Reinforcement shall be shown to the nearest pound.
The quantities shown for the pedestals shall be the total for all pedestals on this abutment.

Designer/Detailer
If there is no reinforcement in the top of the footing it may be necessary to use a 90° bend in the dowels instead of a hook. This should allow the wiring of the dowels in more than one place to help hold them vertical.
In some instances, showing the location of the stem and wingwalls superimposed on the footing plan by means of a dotted line may clarify complicated reinforcement details. It may be advisable to increase the scale from 3/8"=1'-0" to 3/16" or 1/4"=1'-0".

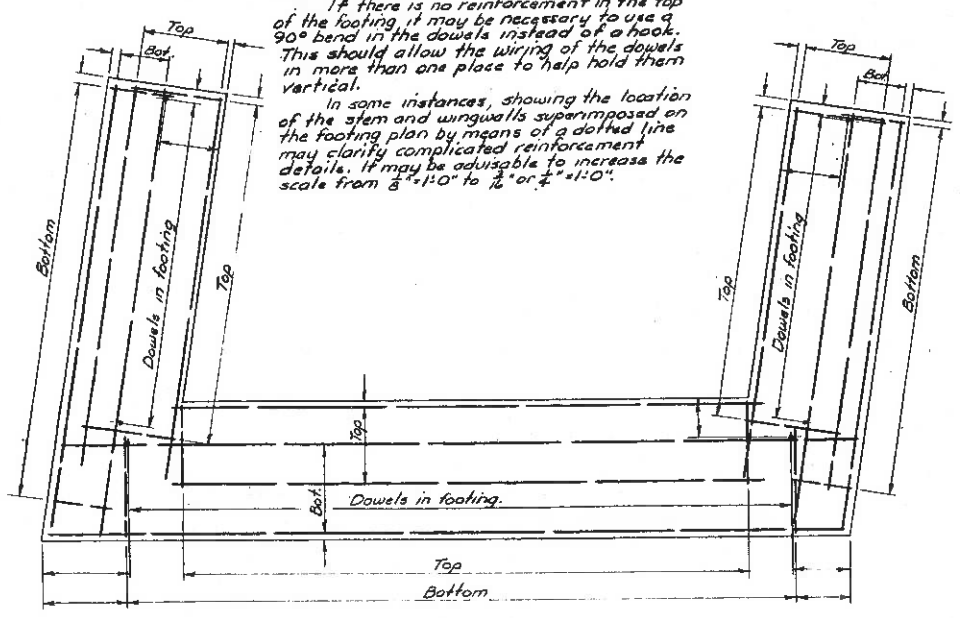

FOOTING REINFORCEMENT PLAN
Scale 3/8"=1'-0"

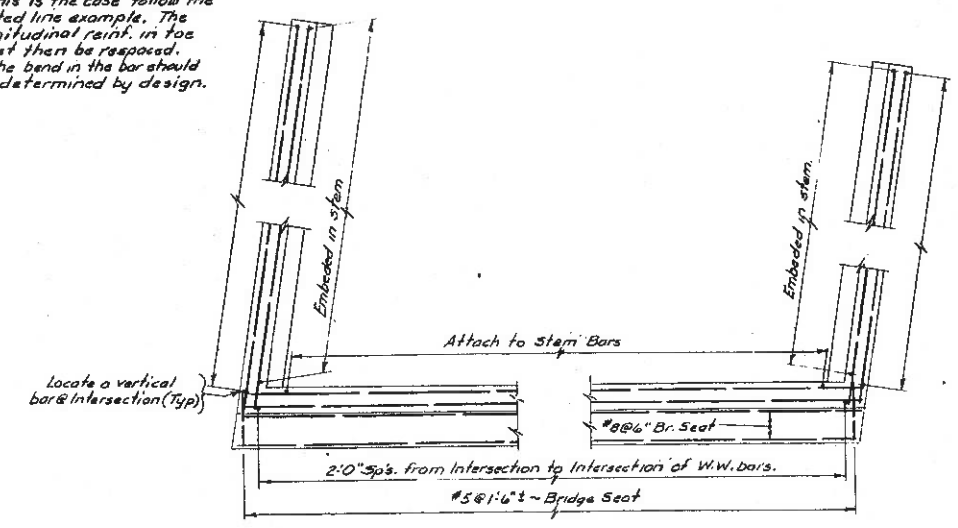

BACKWALL & UPPER WINGWALL REINFORCEMENT
Scale 3/16"=1'-0"

Detailer:
All reinforcement to be verified by designer.

Reserved for notes

DATE MADE
PROJECT ENGINEER
IN CHARGE OF
DESIGNED BY
DESIGN CHECKED BY
DETAILED BY
DETAIL CHECKED BY

STATE OF NEW YORK
DEPARTMENT OF TRANSPORTATION
DIVISION OF CONSTRUCTION

SAMPLE DETAIL — SUBSTRUCTURE

ABUTMENT SECTIONS
REINFORCEMENT DETAILS
FOR SKEW 30° & UNDER

DRAWING NO. GLD-A2

REVISED JULY 1976

FED. RD. REG. NO.	STATE	FEDERAL AID PROJECT NO.	SHEET NO.	TOTAL SHEETS
	NEW YORK			

FOR USE AS A GUIDE ONLY

CAPITAL PROJECT IDENTIFICATION NO.

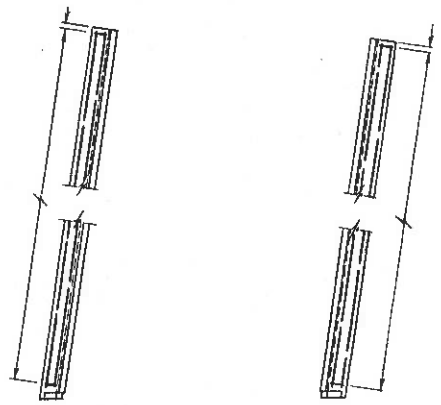

S.W. OVERLAY N.W. OVERLAY

BRUSH CURB OVERLAY REINFORCEMENT

Scale $\frac{3}{16}$"=1'-0"

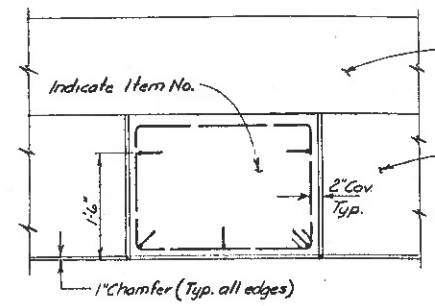

TYPICAL PLAN

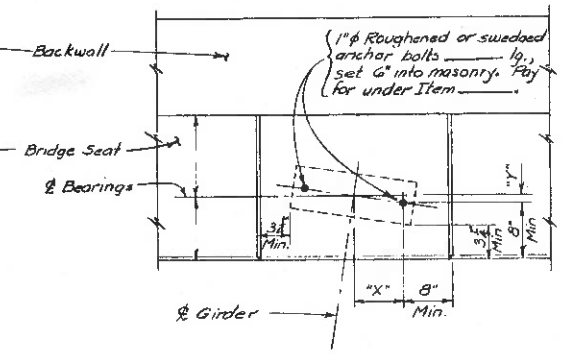

ANCHOR BOLT LAYOUT

Detailer:
Be sure to give the "X" & "Y" offset dimensions.
If the base plate encroaches on the 3¼" Min. dimension it may be necessary to clip the corner of the ℞. Check with the designer.

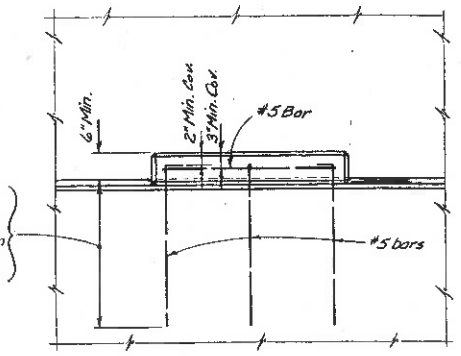

Detailer:
Use the same length dowel in all pedestals. Minimum embedment is set by highest pedestal.

ELEVATION FASCIA PEDESTAL

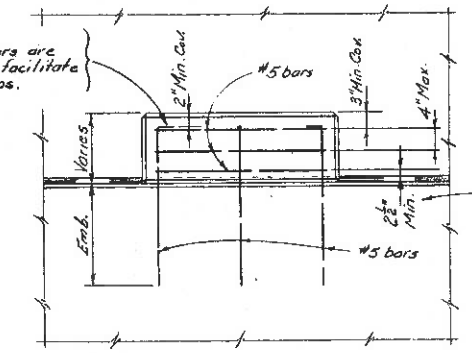

Detailer:
The dowel bars are set 1" higher to facilitate wiring of stirrups.

Detailer:
We set this dimension at 2½" to insure the bar will be completely surrounded by concrete.

ELEVATION INTERIOR PEDESTAL

PEDESTAL DETAILS

Scale ¼"=1'-0"

Detailer:
All reinforcement to be verified by designer.

Area reserved for notes

DATE MADE.....
PROJECT ENGINEER.....
IN CHARGE OF.....
DESIGNED BY.....
DESIGN CHECKED BY.....
DETAILED BY.....
DETAIL CHECKED BY.....

STATE OF NEW YORK
DEPARTMENT OF TRANSPORTATION
DIVISION OF CONSTRUCTION

SAMPLE DETAIL——SUBSTRUCTURE

PEDESTALS & OVERLAYS

FOR SKEW 30° & UNDER

DRAWING NO. GLD-A3

REVISED JULY 1976

FED. RD. REG. NO.	STATE	FEDERAL AID PROJECT NO.	SHEET NO.	TOTAL SHEETS
	NEW YORK			

FOR USE AS A GUIDE ONLY

CAPITAL PROJECT IDENTIFICATION NO.

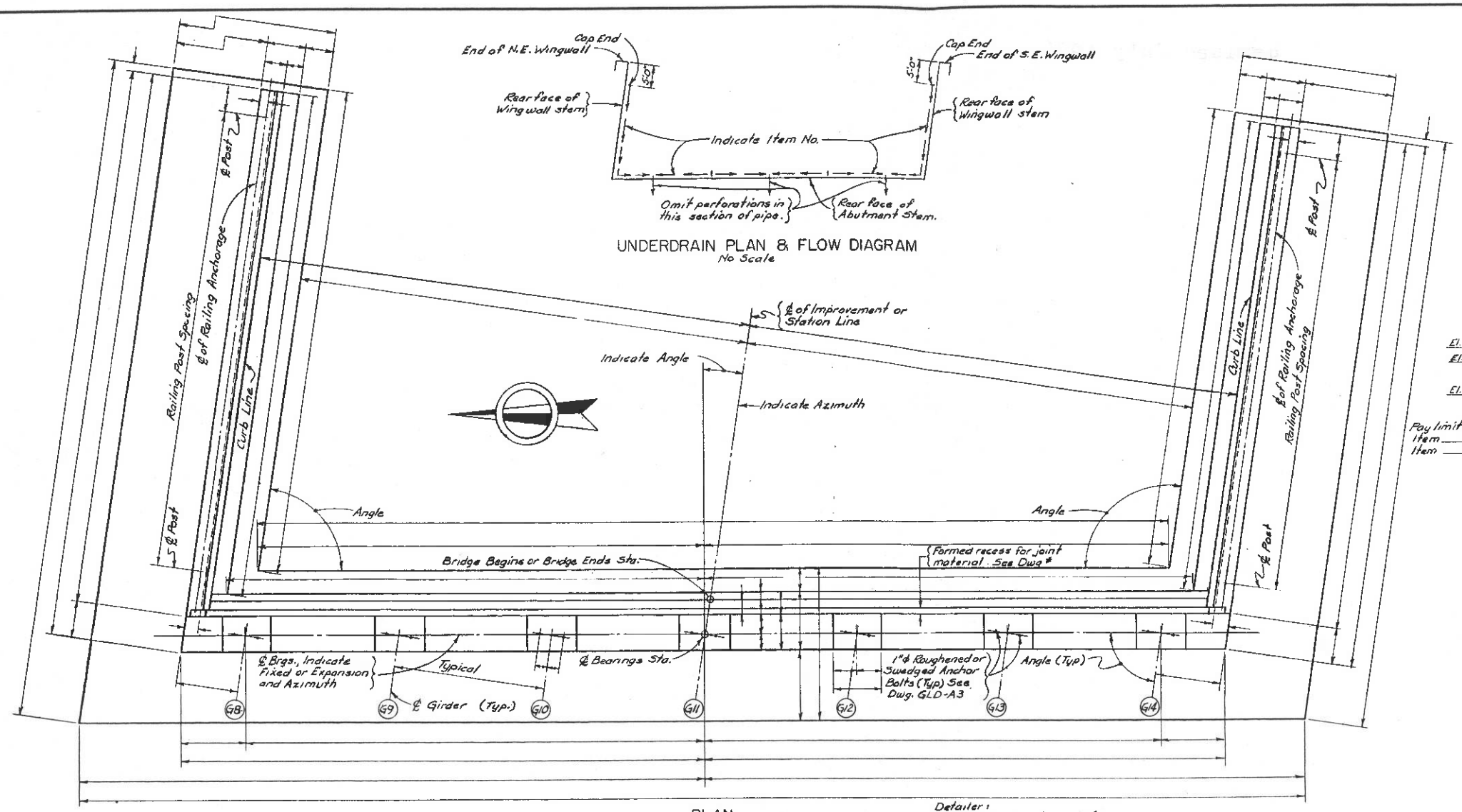

DATE MADE
PROJECT ENGINEER
IN CHARGE OF
DESIGNED BY
DESIGN CHECKED BY
DETAILED BY
DETAIL CHECKED BY

STATE OF NEW YORK
DEPARTMENT OF TRANSPORTATION
DIVISION OF CONSTRUCTION

SAMPLE DETAIL — SUBSTRUCTURE

ABUTMENT PLAN AND ELEVATION ON PILES

FOR SKEW 30° & UNDER

DRAWING NO. GLD – A4

REVISED JULY 1976

FED. RD. REG. NO.	STATE	FEDERAL AID PROJECT NO.	SHEET NO.	TOTAL SHEETS
	NEW YORK			

FOR USE AS A GUIDE ONLY

CAPITAL PROJECT IDENTIFICATION NO.

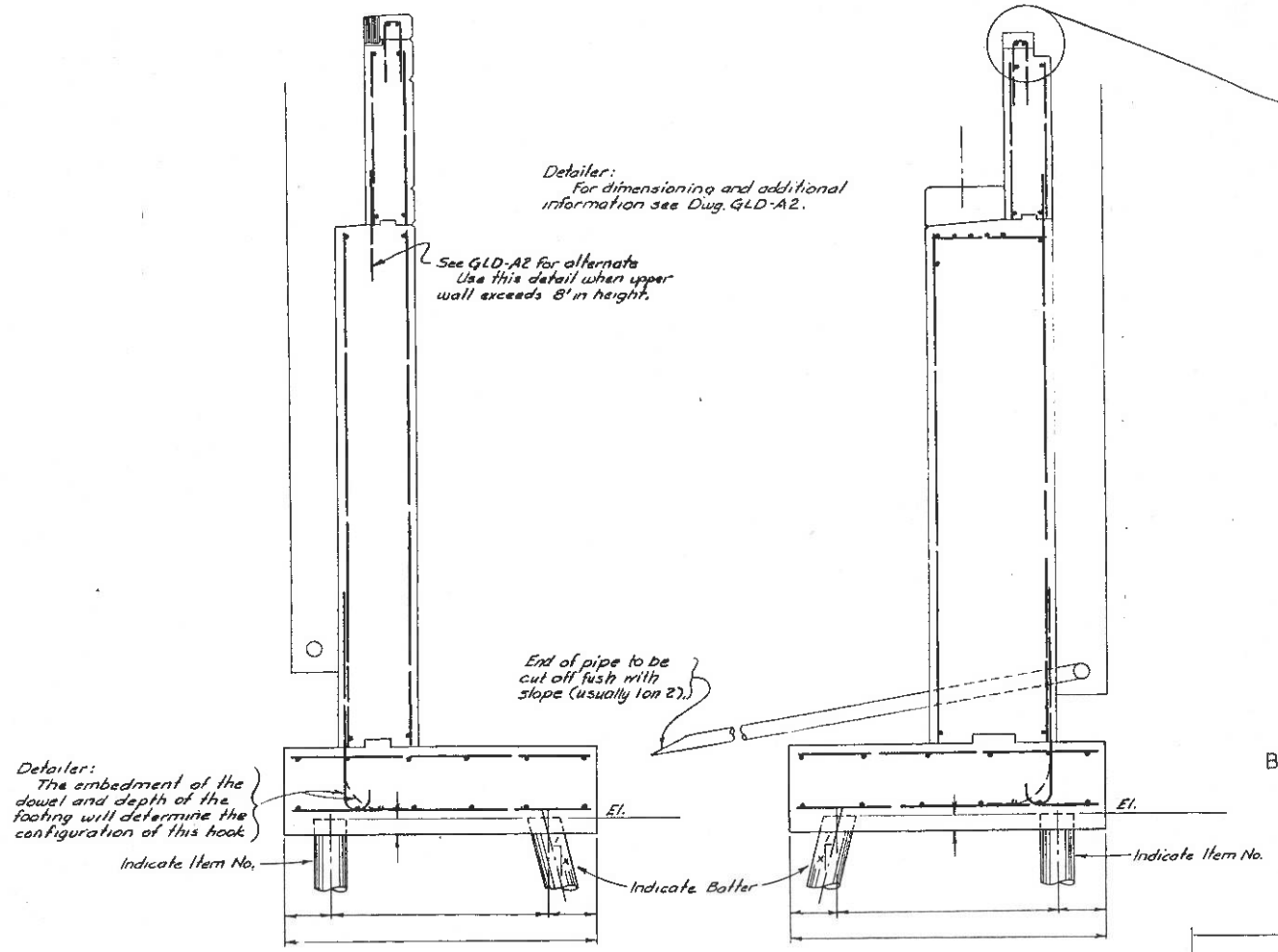

TYPICAL WINGWALL SECTION
Scale 3/8"=1'-0"

TYPICAL ABUTMENT SECTION
Scale 3/8"=1'-0"

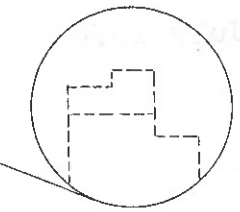

HEADER DETAIL
Scale 1"=1'-0"

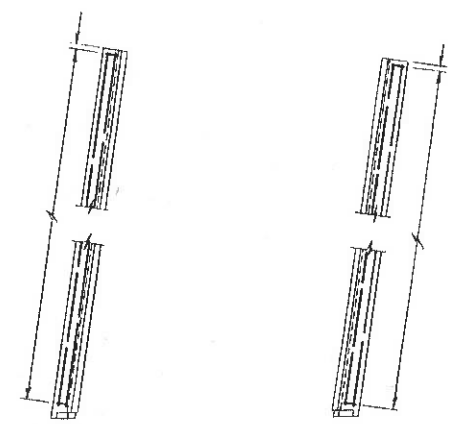

N.E. OVERLAY S.E. OVERLAY
BRUSH CURB OVERLAY REINFORCEMENT
Scale 3/16"=1'-0"

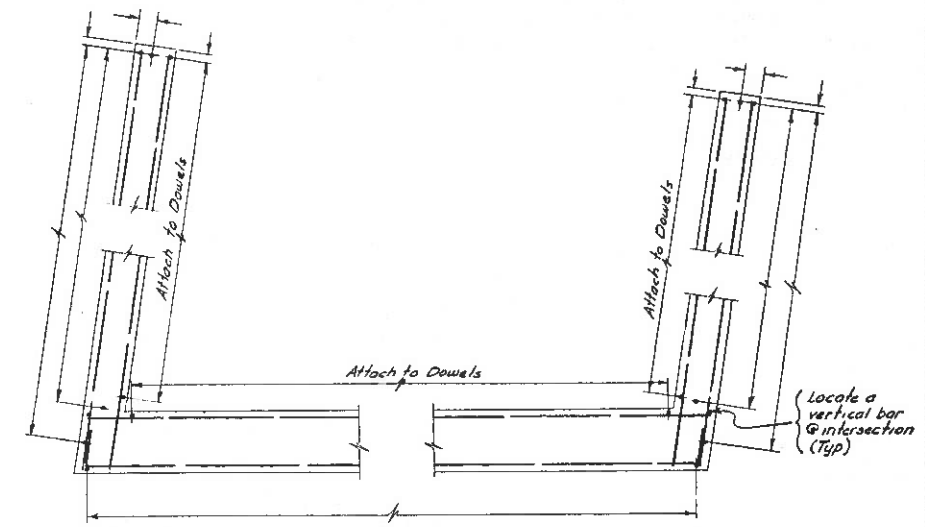

STEM REINFORCEMENT
Scale 3/16"=1'-0"

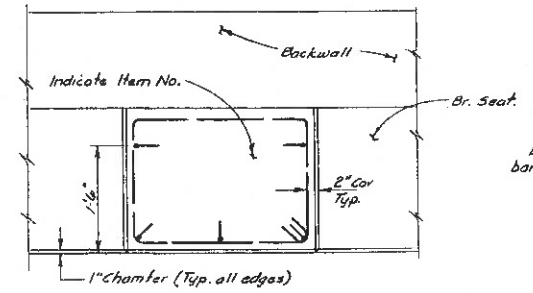

PEDESTAL PLAN
Scale 3/4"=1'-0"

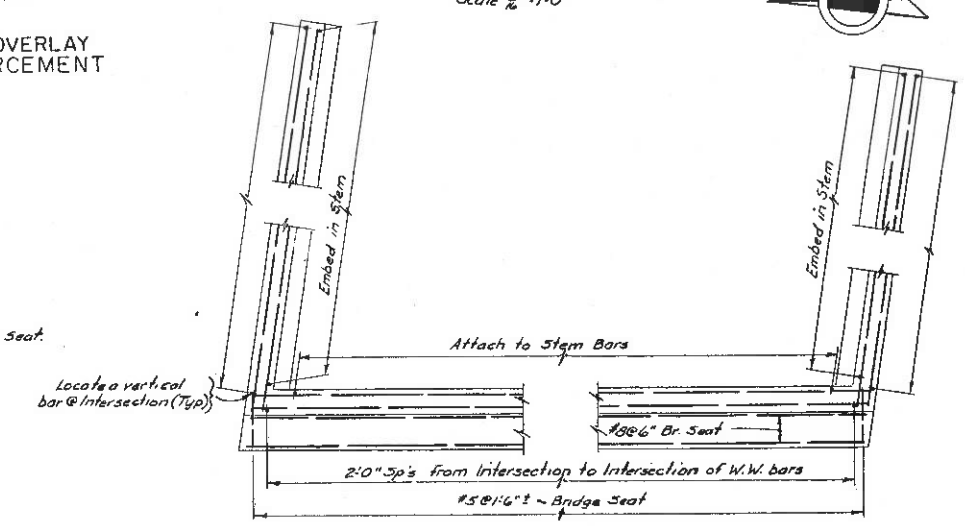

BACKWALL & UPPER WINGWALL REINFORCEMENT
Scale 3/16"=1'-0"

Detailer:
Show anchor bolt detail or refer to appropriate drawing where information is given.

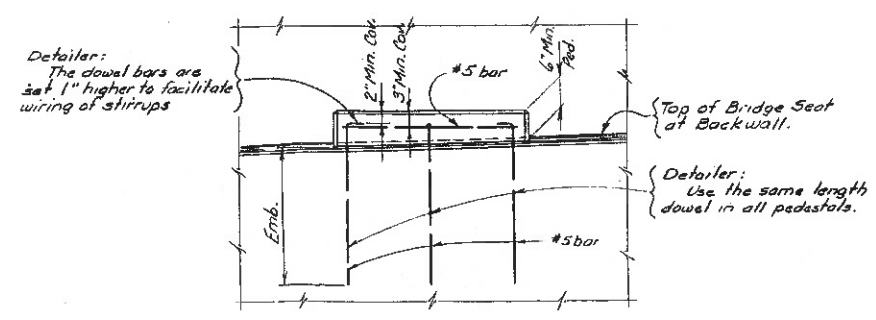

PEDESTAL ELEVATION
Scale 3/4"=1'-0"

Detailer:
All reinforcement to be verified by designer.

Area reserved for notes

DATE MADE
PROJECT ENGINEER
IN CHARGE OF
DESIGNED BY
DESIGN CHECKED BY
DETAILED BY
DETAIL CHECKED BY

STATE OF NEW YORK
DEPARTMENT OF TRANSPORTATION
DIVISION OF CONSTRUCTION

SAMPLE DETAIL — SUBSTRUCTURE

ABUTMENT SECTIONS
REINFORCEMENT DETAILS
FOR SKEW 30° & UNDER

DRAWING NO. GLD-A6

REVISED JULY 1976

FED. RD. REG. NO.	STATE	FEDERAL AID PROJECT NO.	SHEET NO.	TOTAL SHEETS
	NEW YORK			

FOR USE AS A GUIDE ONLY

CAPITAL PROJECT IDENTIFICATION NO.

CONSTRUCTION & CONTRACTION JOINTS		
C	B	T/3
1/4"	1 1/2"	to 6"
1/2"	3 1/2"	6" to 10"
3/4"	5 1/2"	over 10"

EXPANSION JOINTS		
C	B	T/3
1/2"	3 1/2"	to 10"
3/4"	5 1/2"	over 10"

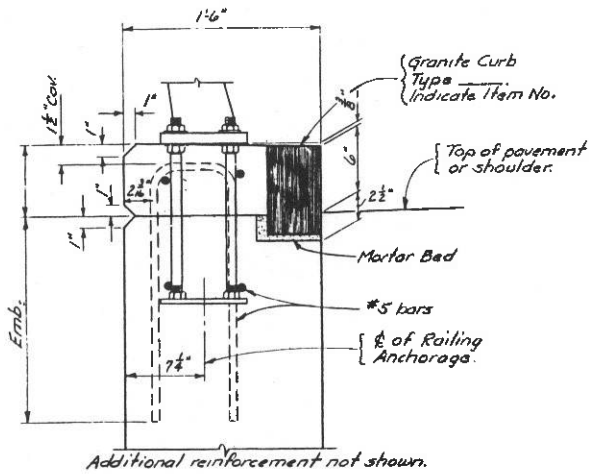

TOP OF WINGWALL DETAIL
Scale 1½"=1'-0"

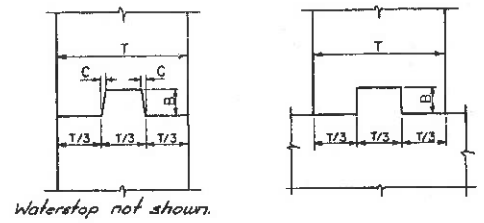

KEYWAY DETAILS
No Scale

Note:
All Keys should begin and end 1'-0"± from the edge of pour as indicated below.

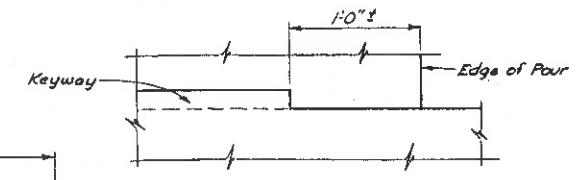

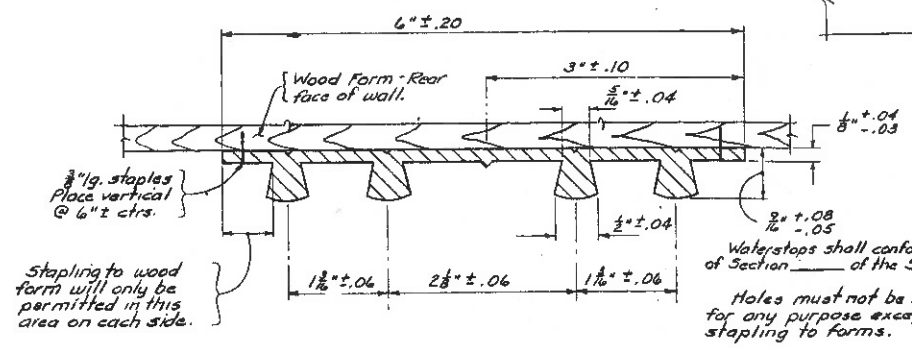

TYPE D WATERSTOP
Full Scale

Waterstops shall conform to the requirements of Section _____ of the Specifications.

Holes must not be made in waterstop for any purpose except as required for stapling to forms.

Type D Waterstop shall be light gray in color.

The cost of furnishing and placing waterstops shall be included in the unit price bid for the concrete items.

Detailer:
This detail must be accompanied by Type E Waterstop Details as shown on GLD-A7a

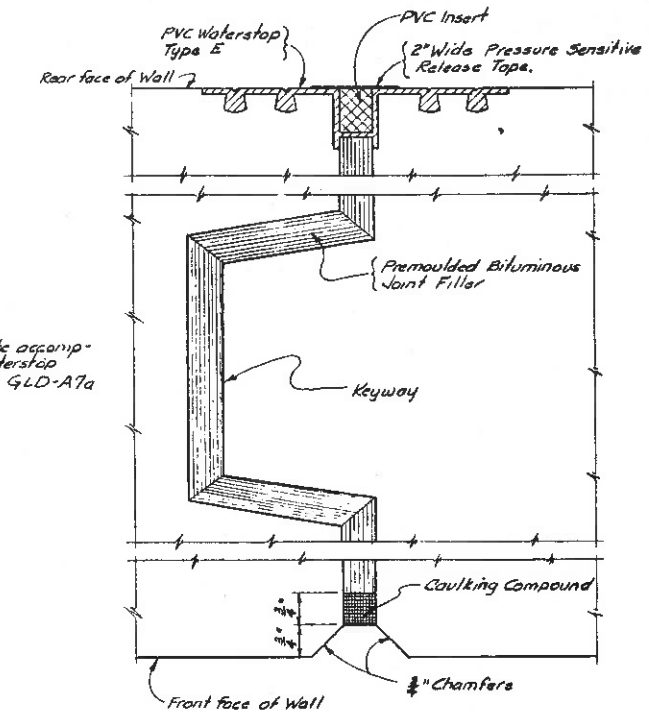

TYPICAL EXPANSION JOINT DETAIL
Scale 6"=1'-0"

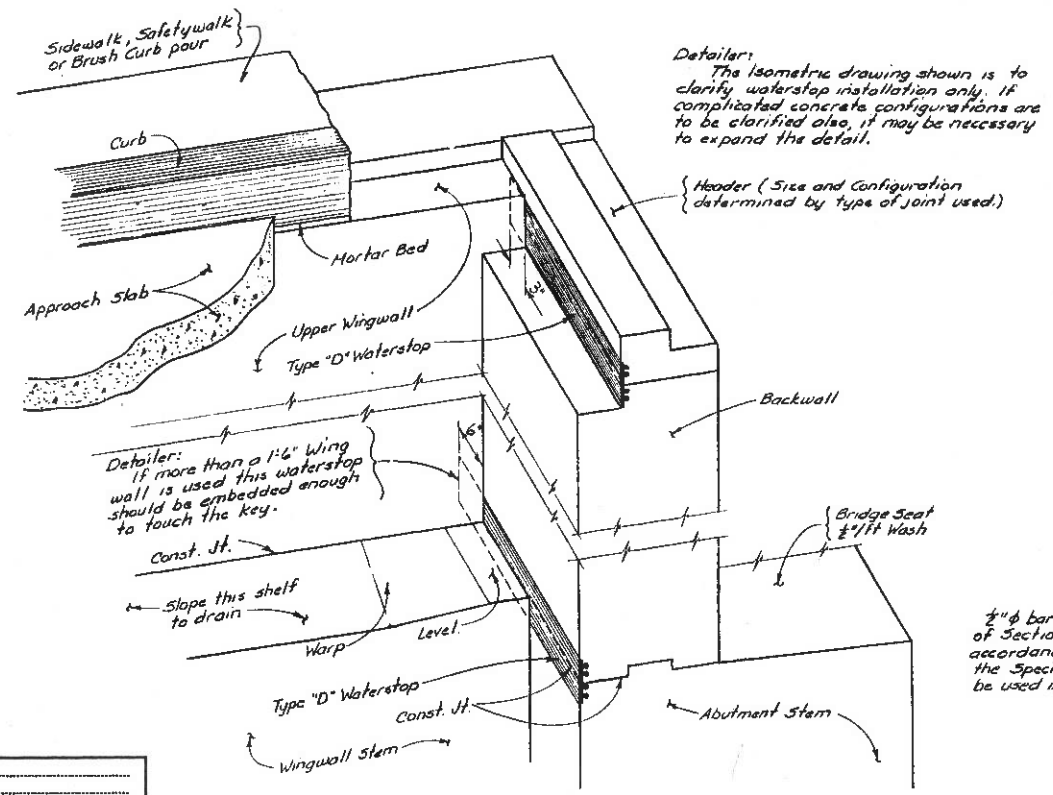

Detailer:
The Isometric drawing shown is to clarify waterstop installation only. If complicated concrete configurations are to be clarified also, it may be necessary to expand the detail.

WATERSTOP LOCATION DETAIL

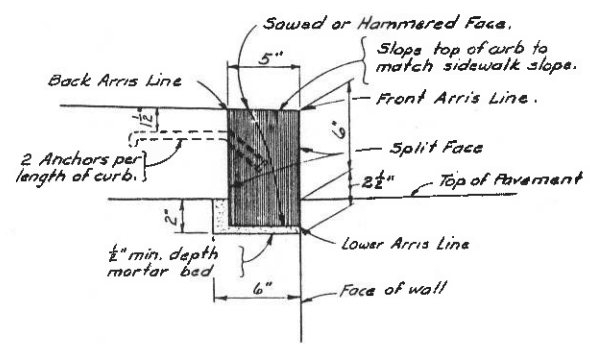

DETAIL OF GRANITE CURB-TYPE G_1
ITEM NO. _____
No Scale

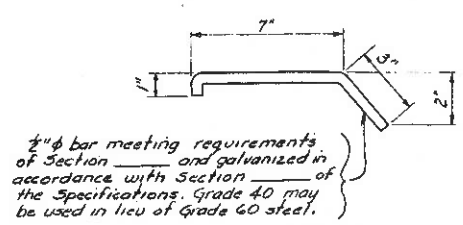

¼"ϕ bar meeting requirements of Section _____ and galvanized in accordance with Section _____ of the Specifications. Grade 40 may be used in lieu of Grade 60 steel.

DETAIL OF ANCHOR BAR
No Scale

Area reserved for Notes

DATE MADE.....
PROJECT ENGINEER.....
IN CHARGE OF.....
DESIGNED BY.....
DESIGN CHECKED BY.....
DETAILED BY.....
DETAIL CHECKED BY.....

STATE OF NEW YORK
DEPARTMENT OF TRANSPORTATION
DIVISION OF CONSTRUCTION

SAMPLE DETAIL—— SUBSTRUCTURE

MISC. ABUTMENT DETAILS

DRAWING NO. GLD-A7

REVISED JULY 1976

FED. RD. REG. NO.	STATE	FEDERAL AID PROJECT NO.	SHEET NO.	TOTAL SHEETS
	NEW YORK			

FOR USE AS A GUIDE ONLY

CAPITAL PROJECT IDENTIFICATION NO.

Designer/Detailer:
Include in the plans whenever the Foundation Design Requirements report states, "The use of Mechanical Pile Splices shall be allowed on this structure."

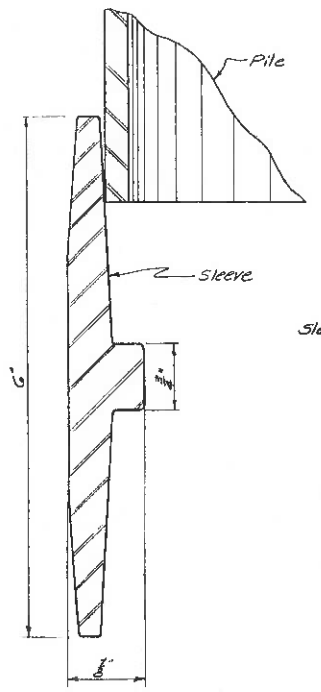

SECTION THRU SLEEVE

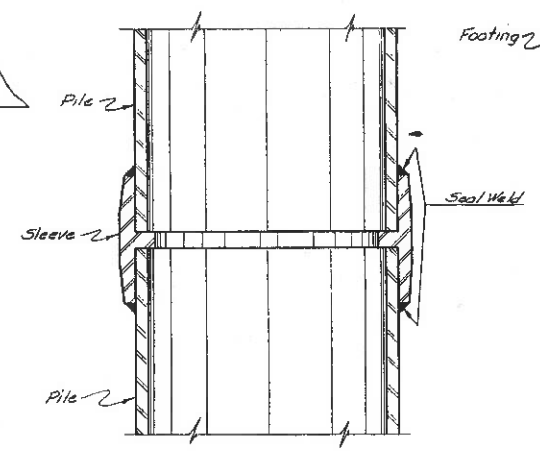

SECTION THRU PILE AT SPLICE

MECHANICAL SPLICE DETAILS

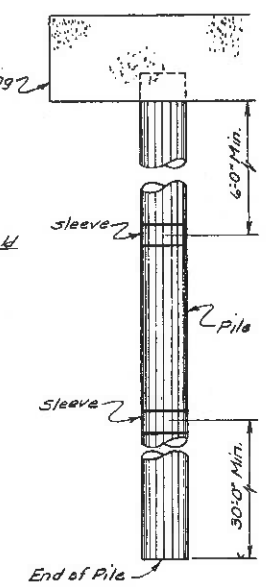

PILE ELEVATION
Mechanical Splice Only

CAST-IN-PLACE PILE SPLICE DETAILS
No Scale

Note:
Options I and II differ only in the type of intermittent spacer.

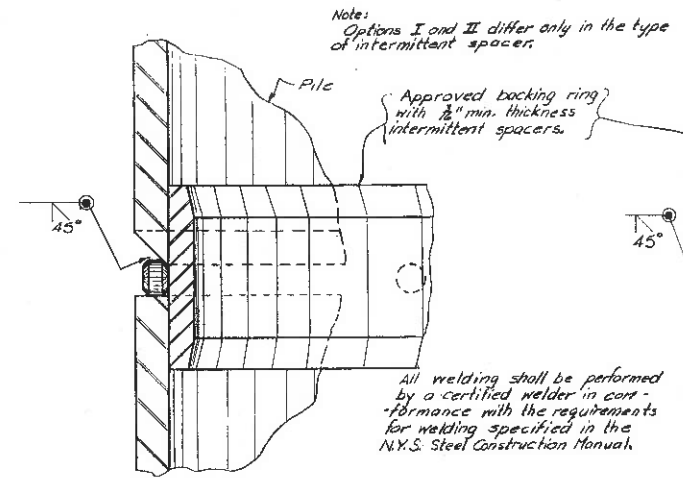

SECTION THRU PILE AT SPLICE
(OPTION I)

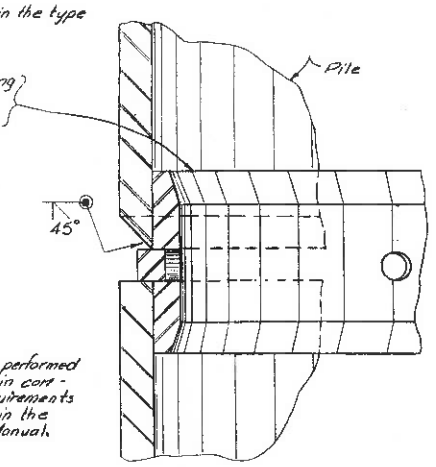

SECTION THRU PILE AT SPLICE
(OPTION II)

Designer/Detailer
Include Option I & Option II in contract plans whenever Cast-in-place Concrete Piles are used.

WELDED SPLICE DETAILS

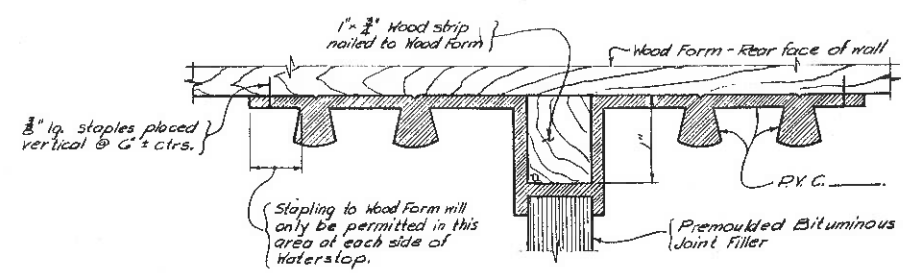

STAGE ONE - PRIOR TO POURING CONCRETE

~Material~
Type E Waterstop: Material shall comply with Material Specification _____. Color shall be light gray. Holes must not be made in waterstop for any purpose except as required for stapling to form.
Waterstop shall be shipped in straight sections having a minimum length of 10'-0" unless shorter lengths are required at specific locations.

P.V.C. Insert: Closed cell polyvinyl (SP) Grade VE-45 as per ASTM D1667 or Closed-Cell Rubber Grade RE-45, Class E, as per ASTM D1056. Color shall be light gray.
Material shall be sampled at the same time as the Type E Waterstop.

Note:
P.V.C. Insert and Pressure-sensitive Release Tape shall be installed in the field prior to placing the backfill.

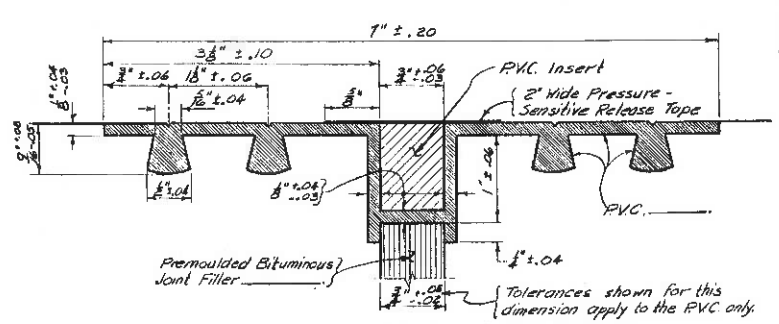

STAGE TWO - AFTER FORMS HAVE BEEN REMOVED

TYPE 'E' WATERSTOP
DETAILS AND INSTALLATION PROCEDURES
Scale: 1" = 1'

Detailer:
For "Typical Expansion Joint Detail" showing "Type E" waterstop, see GLD-A7.

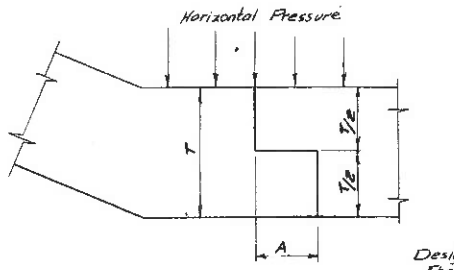

CONTRACTION JOINT	
T/2	A
TO 9"	3 1/2"
OVER 9"	5 1/2"

KEYWAY DETAILS FOR
FLARED WINGWALL ABUTMENTS
No Scale

Designer/Detailer:
The Keyway should be reinforced if required by design.

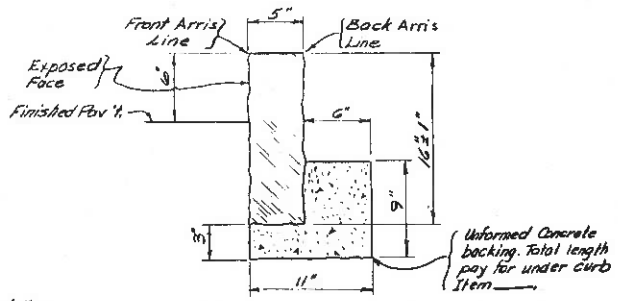

TYPE 'A' CURB (NON-MOUNTABLE)
SAWED OR HAMMERED TOP, QUARRY SPLIT FACE
ITEM NO. _____
Scale 1 1/2" = 1'-0"

This area reserved for notes

DATE MADE.....
PROJECT ENGINEER.....
IN CHARGE OF.....
DESIGNED BY.....
DESIGN CHECKED BY.....
DETAILED BY.....
DETAIL CHECKED BY.....

STATE OF NEW YORK
DEPARTMENT OF TRANSPORTATION
DIVISION OF CONSTRUCTION
SAMPLE DETAIL - SUBSTRUCTURE
MISC. ABUTMENT DETAILS CONT'D

DRAWING NO. GLD-A7a

REVISED JULY 1976

FED. RD. REG. NO.	STATE	FEDERAL AID PROJECT NO.	SHEET NO.	TOTAL SHEETS
	NEW YORK			

FOR USE AS A GUIDE ONLY

CAPITAL PROJECT IDENTIFICATION NO.

Detailer:
Sections shown here are of the type and number required for this abutment. For required type of reinforcing and necessary dimensions see GLD-A2.
For plan of reinforcement for stem, backwall & footing see GLD-A2.

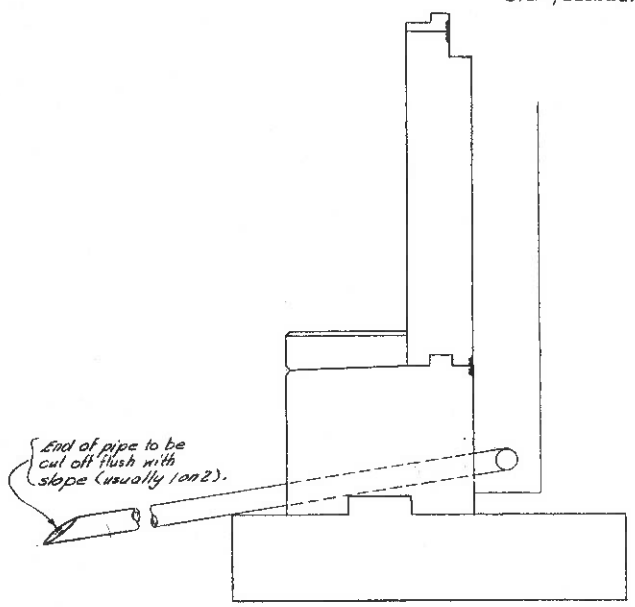

ABUTMENT SECTION
Scale $\frac{1}{2}$"=1'-0"

Note:
Railing anchorage shown in Section A-A.

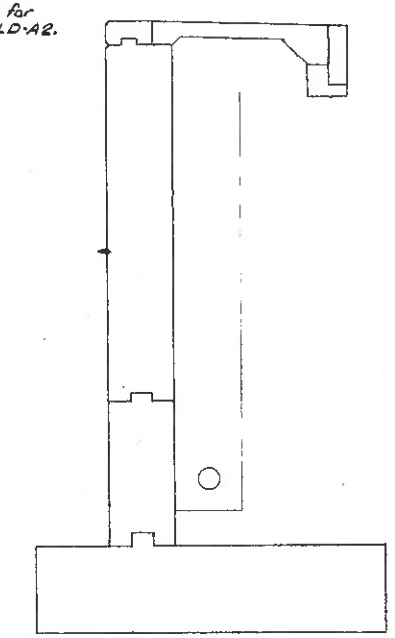

N.W. WINGWALL SECTION
Scale $\frac{1}{2}$"=1'-0"

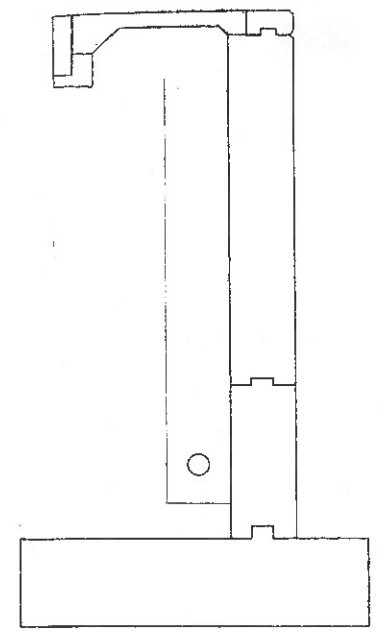

N.E. WINGWALL SECTION
Scale $\frac{1}{2}$"=1'-0"

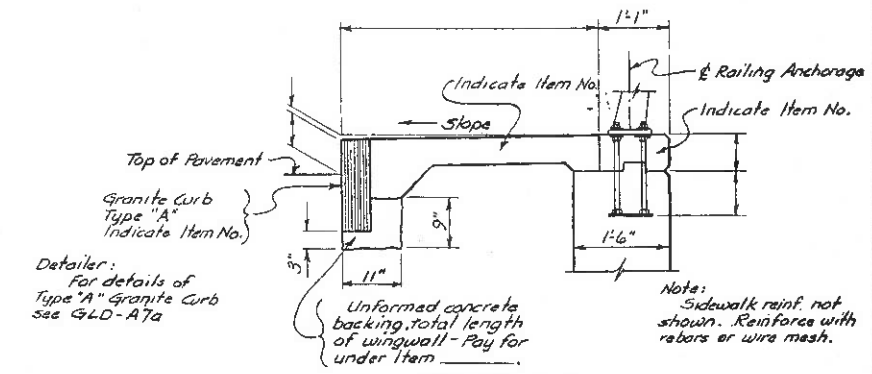

SECTION A-A
Scale $\frac{3}{4}$"=1'-0"

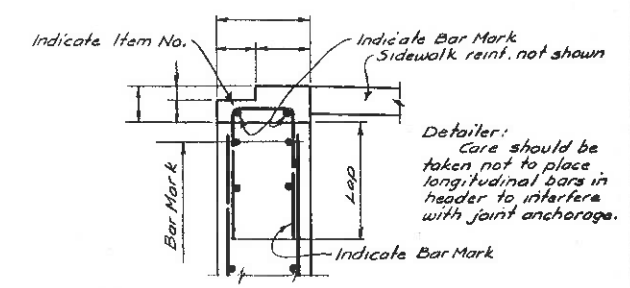

Detailer:
Care should be taken not to place longitudinal bars in header to interfere with joint anchorage.

SECTION B-B
Scale $\frac{3}{4}$"=1'-0"

Note:
Railing not shown.

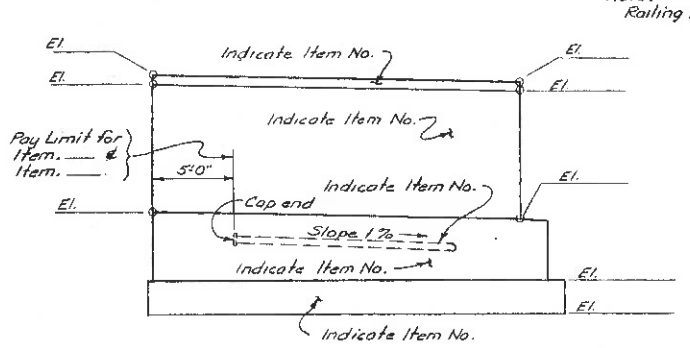

N.W. WINGWALL
Scale $\frac{1}{2}$"=1'-0"

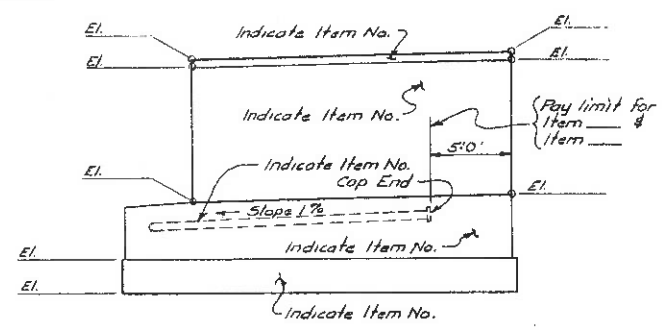

N.E. WINGWALL
Scale $\frac{1}{2}$"=1'-0"

This area reserved for notes

REINF. & CONCRETE TABLE

DATE MADE.....
PROJECT ENGINEER.....
IN CHARGE OF.....
DESIGNED BY.....
DESIGN CHECKED BY.....
DETAILED BY.....
DETAIL CHECKED BY.....

STATE OF NEW YORK
DEPARTMENT OF TRANSPORTATION
DIVISION OF CONSTRUCTION

SAMPLE DETAIL – SUBSTRUCTURE

ABUTMENT SECTIONS
REINFORCEMENT DETAILS
FOR SKEWS OVER 30°

DRAWING NO. GLD-A9

REVISED JULY 1976

FED. RD. REG. NO.	STATE	FEDERAL AID PROJECT NO.	SHEET NO.	TOTAL SHEETS
	NEW YORK			

FOR USE AS A GUIDE ONLY

CAPITAL PROJECT IDENTIFICATION NO.

Designer/Detailer:
Wingwalls shown in plan are drawn 1'-6" thick. If thicker wingwalls are required for design, make the walls a constant thickness.

Tapered wingwall footings may be used, if in your judgement substantial savings may be realized.

Designer/Detailer
Prior to design of wingwalls and computation of their lengths, it will be to your advantage to draw all four corners of abutments to a large scale. Based on location of theoretical shoulder break line location of contraction joint and angle of wingwall with the backwall the point of intersection and length of wingwall may be determined. An economical and logical intersection location may require trial and error.

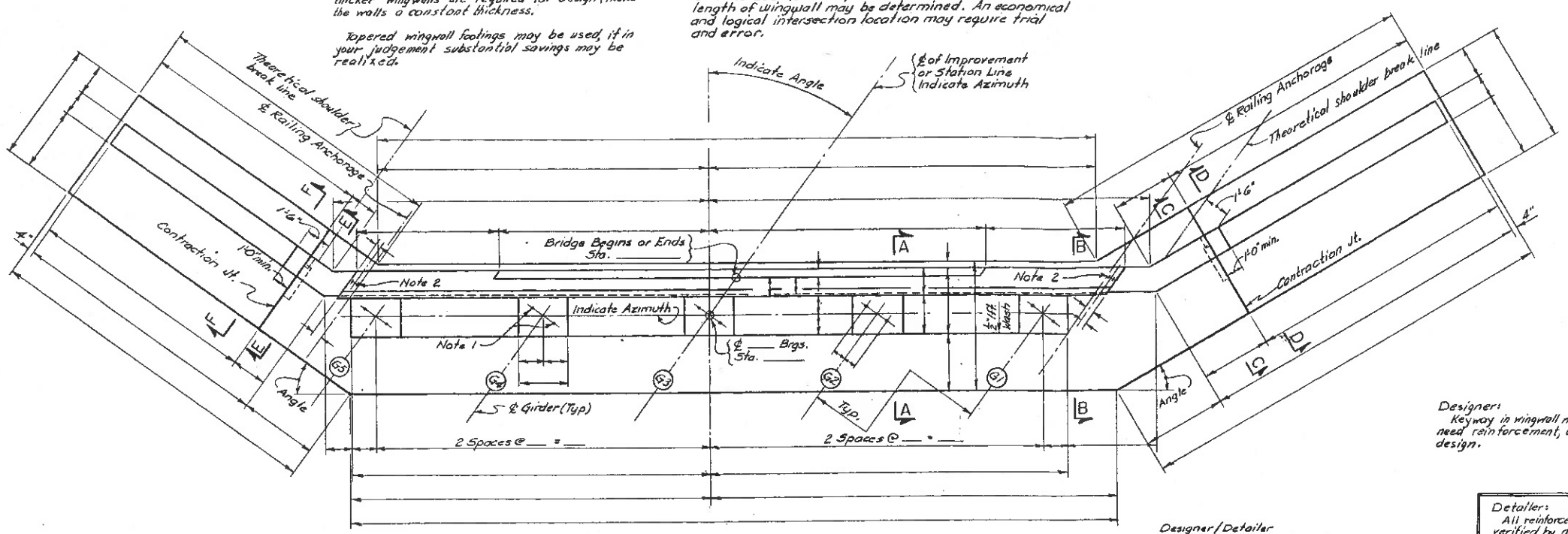

PLAN
Scale 1/4"=1'-0"

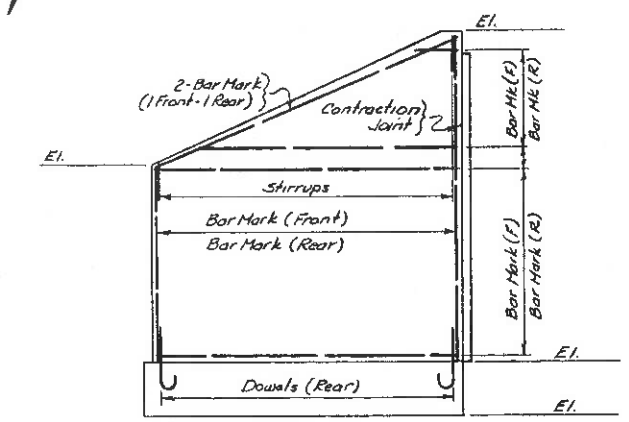

S.E. WINGWALL ELEVATION
Scale 1/4"=1'-0"

Note:
Piles not shown, footing reinf. not shown.

Designer:
Keyway in wingwall may need reinforcement, check design.

Detailer:
All reinforcement to be verified by designer.

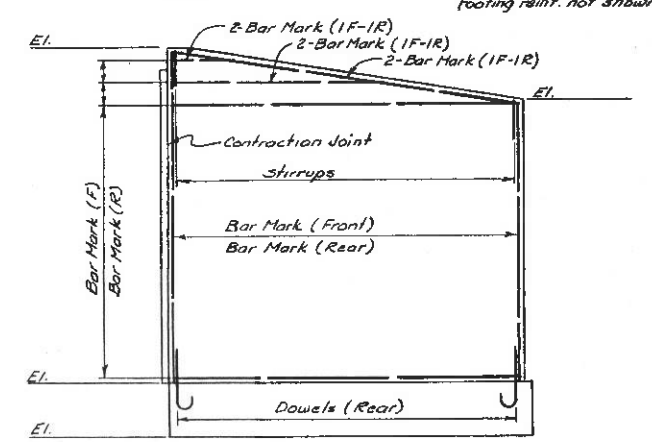

S.W. WINGWALL ELEVATION
Scale 1/4"=1'-0"

Designer/Detailer
The type header shown is for armored elastomeric joint system.

Designer/Detailer
The elevations of the top of the backwall and header must take into account the skew, vertical curve correction, horizontal curvature, etc.
Check to see if Utility Conduit or any openings must be provided in the abutment.

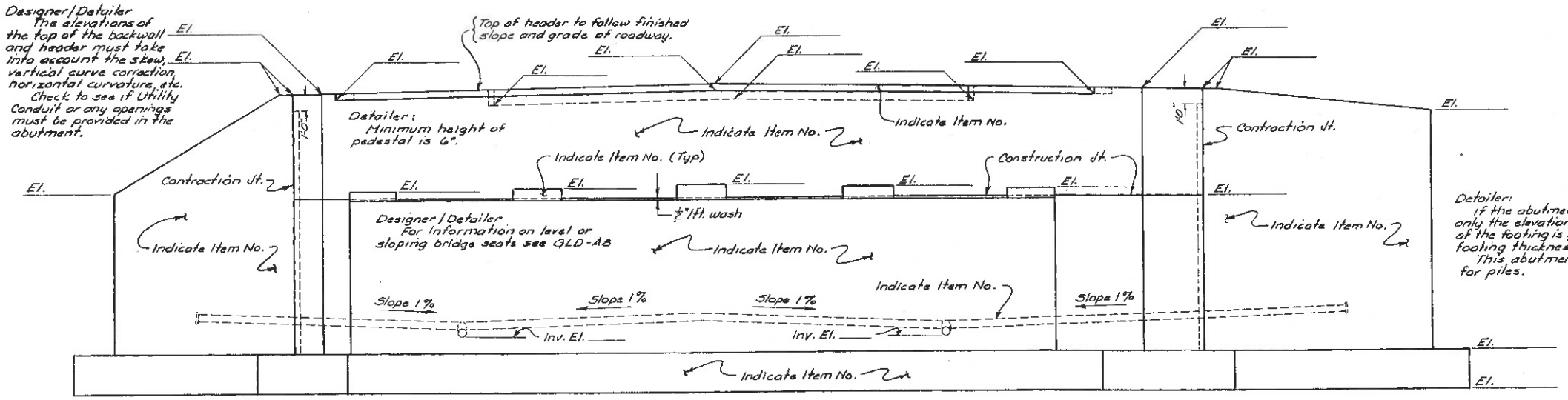

Note:
Piles not shown.

ELEVATION
Scale 1/4"=1'-0"

Designer/Detailer
Invert El. shown at face of abutment (0'-6" above Low Water) is only given for stream bridges.

Detailer:
If the abutment is on rock only the elevation of the top of the footing is given and a footing thickness.
This abutment is drawn for piles.

Notes:
1. 1"ϕ roughened or swedged anchor bolts, ___ lg, set ___" into masonry. For details see Dwg #___ of ___.

2. 3I5.7 Box Beam Guide Rail Post. For details see Dwg #___ of ___. (Detailer: This post may be necessary due to skew).

References:
For Pile Layout see GLD-A11
For Bearing and Anchor Bolt Details see GLD-A12
For Keyway Details see GLD-A7
For Pile Splice and Reinforcement Details see GLD-A5
For Sections A-A, B-B, C-C, D-D see GLD-A11 and Sections E-E & F-F see GLD-A12.

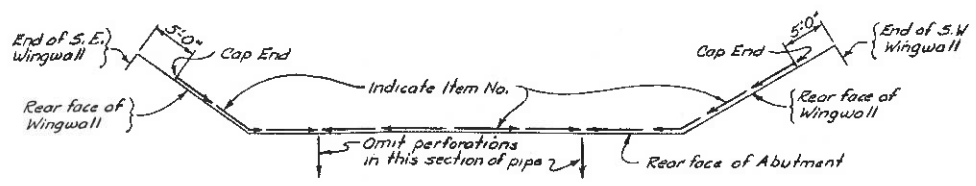

UNDERDRAIN PLAN & FLOW DIAGRAM
Not to Scale

DATE MADE
PROJECT ENGINEER
IN CHARGE OF
DESIGNED BY
DESIGN CHECKED BY
DETAILED BY
DETAIL CHECKED BY

STATE OF NEW YORK
DEPARTMENT OF TRANSPORTATION
DIVISION OF CONSTRUCTION

SAMPLE DETAIL — SUBSTRUCTURE

FLARED WINGWALL ABUTMENT
PLAN & ELEVATION
ON PILES

DRAWING NO. GLD-A10

REVISED JULY 1976

FED. RD. REG. NO.	STATE	FEDERAL AID PROJECT NO.	SHEET NO.	TOTAL SHEETS
	NEW YORK			

FOR USE AS A GUIDE ONLY

CAPITAL PROJECT IDENTIFICATION NO.

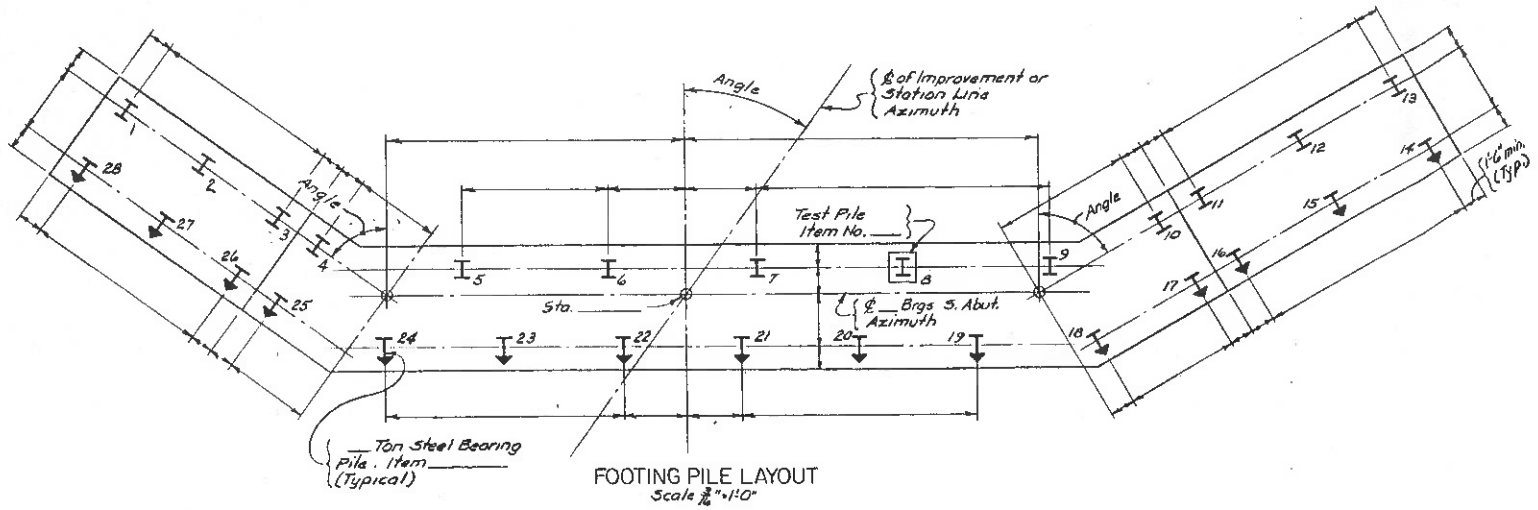

FOOTING PILE LAYOUT
Scale 3/16"=1'-0"

PILE NOTES

Indicates Test Pile

Indicates on 1 Battered Pile

For design purposes the pile load does not exceed ___ tons per pile.
The estimated length of pile is ___ ft.
The ordered length of test pile is ___ ft.
Pile cut off elevation is _____.
The minimum length of pile shall be ___ ft. below bottom of footing elevation.

Detailer
All reinforcement to be verified by designer.

Detailer:
For insert note see GLD-A2.

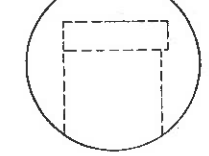

HEADER DETAIL
Scale 3/4"=1'-0"

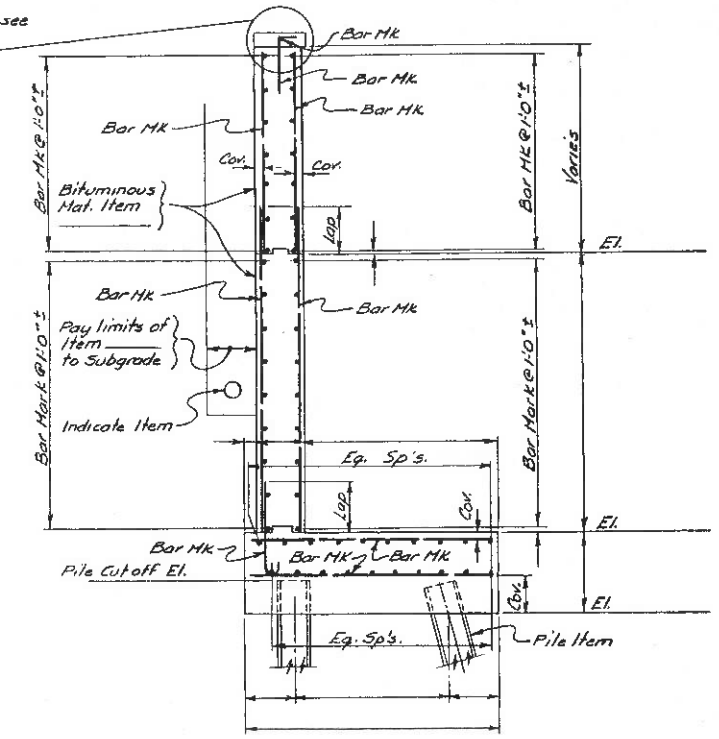

SECTION B-B
Scale 3/8"=1'-0"

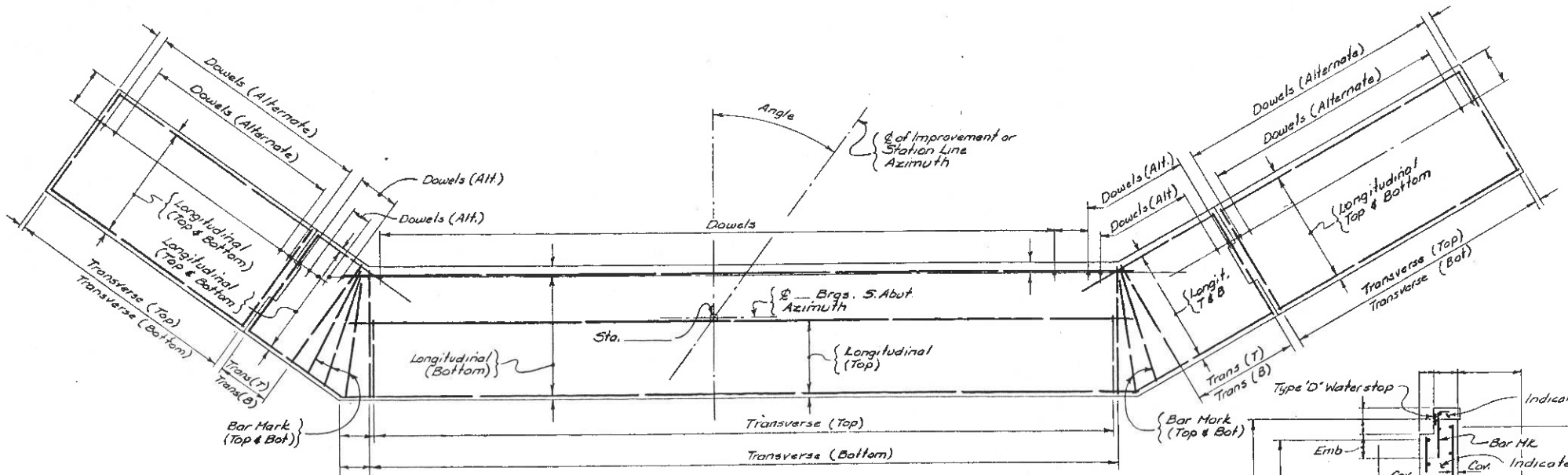

FOOTING REINFORCEMENT PLAN
Scale 1/4"=1'-0"

REINF. & CONCRETE TABLE			

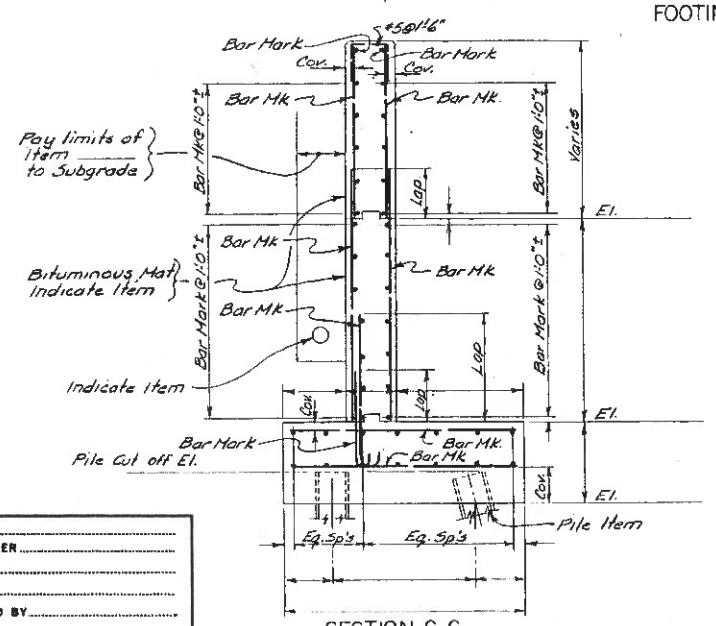

SECTION C-C
Scale 3/8"=1'-0"

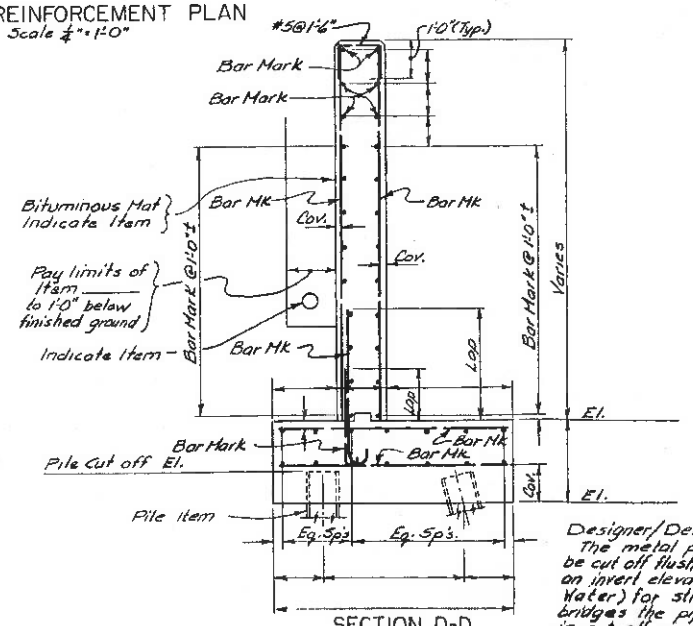

SECTION D-D
Scale 3/8"=1'-0"

Designer/Detailer
The metal pipe underdrain shown shall be cut off flush with the face of the stem and an invert elevation given (0'-6" above Low Water) for stream bridges. For non stream bridges the pipe extends to the slope and is cut off on an angle to match the finished ground (usually 1 on 2).

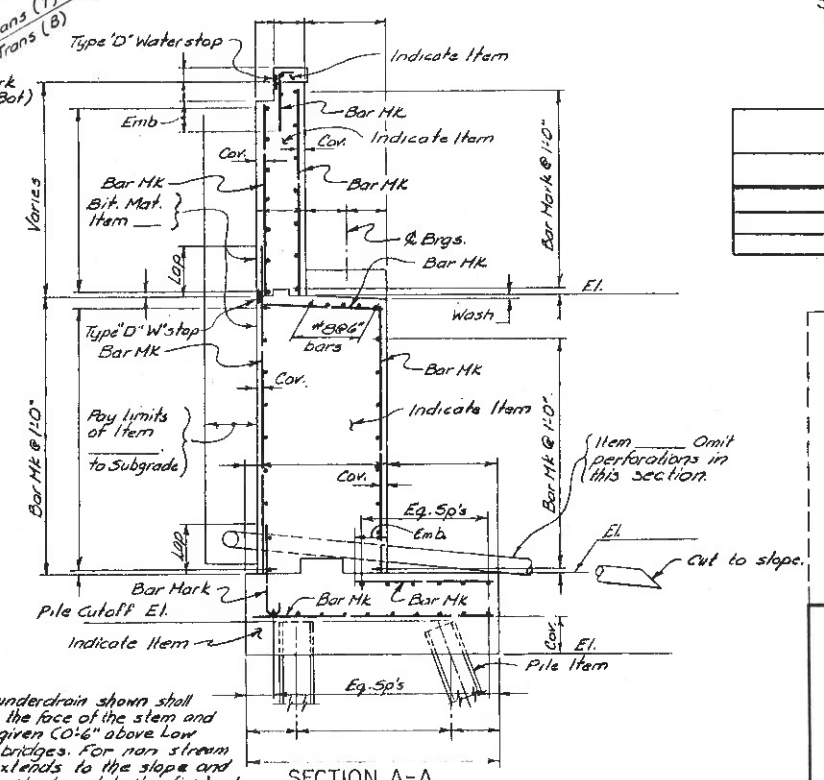

SECTION A-A
Scale 3/8"=1'-0"

Notes:
For Pile details see GLD-A5

DATE MADE
PROJECT ENGINEER
IN CHARGE OF
DESIGNED BY
DESIGN CHECKED BY
DETAILED BY
DETAIL CHECKED BY

STATE OF NEW YORK
DEPARTMENT OF TRANSPORTATION
DIVISION OF CONSTRUCTION

SAMPLE DETAIL – SUBSTRUCTURE

FLARED WINGWALL ABUTMENT
FOOTING PLAN & SECTIONS

DRAWING NO. GLD-A11

REVISED JULY 1976

FED. RD. REG. NO.	STATE	FEDERAL AID PROJECT NO.	SHEET NO.	TOTAL SHEETS
	NEW YORK			

FOR USE AS A GUIDE ONLY

CAPITAL PROJECT IDENTIFICATION NO.

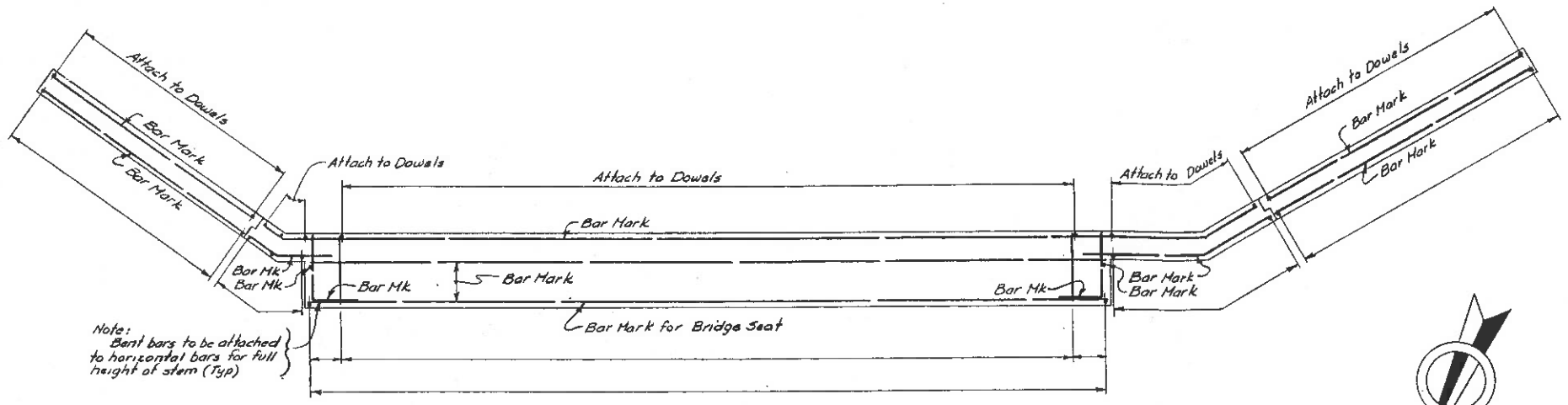

STEM & WINGWALL REINFORCEMENT
Scale 1/4"=1'-0"

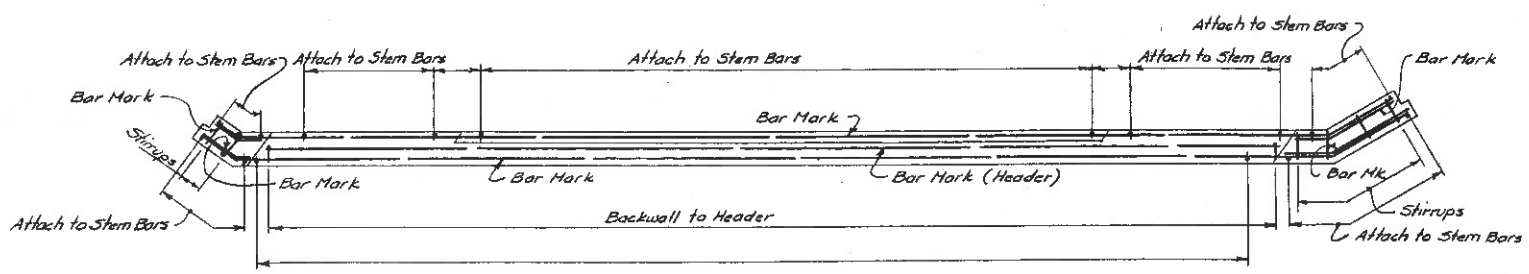

BACKWALL & HEADER REINFORCEMENT
Scale 1/4"=1'-0"

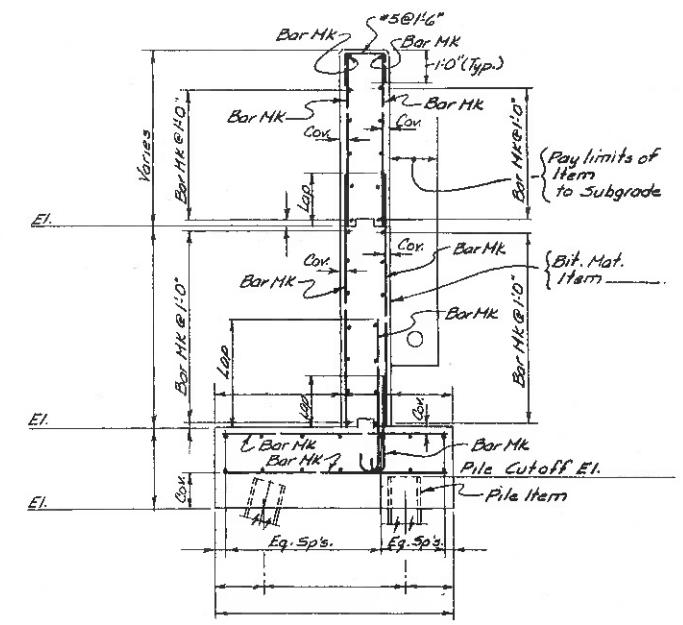

SECTION E-E
Scale 1/4"=1'-0"

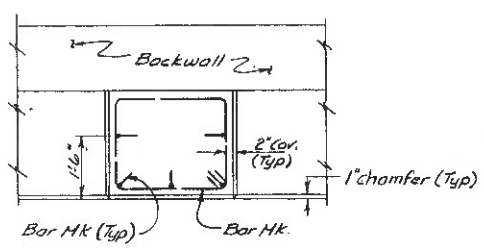

PEDESTAL PLAN
Scale 1/2"=1'-0"

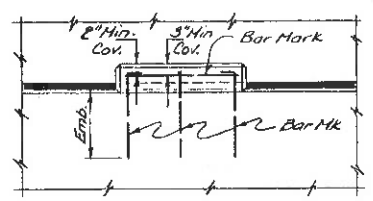

PEDESTAL ELEVATION
Scale 1/2"=1'-0"

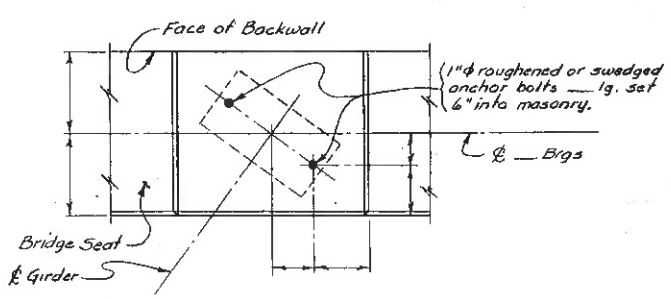

ANCHOR BOLT LAYOUT
Scale 3/4"=1'-0"

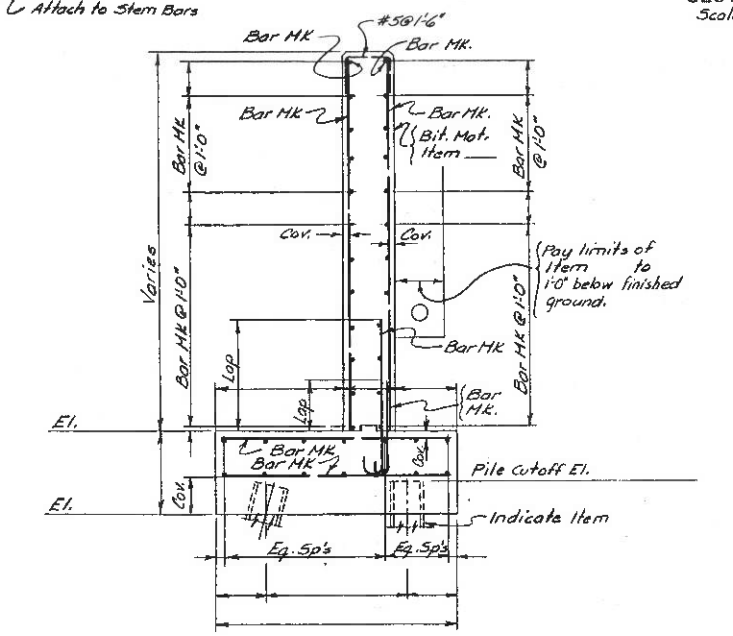

SECTION F-F
Scale 3/4"=1'-0"

Detailer:
All reinforcement to be verified by designer.

Reserved for notes

DATE MADE
PROJECT ENGINEER
IN CHARGE OF
DESIGNED BY
DESIGN CHECKED BY
DETAILED BY
DETAIL CHECKED BY

STATE OF NEW YORK
DEPARTMENT OF TRANSPORTATION
DIVISION OF CONSTRUCTION

SAMPLE DETAIL – SUBSTRUCTURE

FLARED WINGWALL ABUTMENT
REINFORCEMENT PLANS & SECTIONS

DRAWING NO. GLD-A12

REVISED JULY 1976

FED. RD. REG. NO.	STATE	FEDERAL AID PROJECT NO.	SHEET NO.	TOTAL SHEETS
	NEW YORK			

FOR USE AS A GUIDE ONLY

CAPITAL PROJECT IDENTIFICATION NO.

STUD SHEAR CONNECTOR SPACING - ITEM _____

GIRDER	SPACING	TOTAL STUDS	GIRDER	SPACING	TOTAL STUDS
1	Show Spacing		8		
2			9		
3			10		
4			11		
5			12		
6			13		
7			14		
	End of Girder			End of Girder	

Detailer:
If the stud spacing is different for each girder a table such as the one shown here may be used.
If the stud spacing is similiar for each girder the spacing may be shown as on the Girder Details below

Welding Note
* F.P.G.W. = Full Penetration Groove Weld
M.B. = Milled to bear

Detailer:
Always indicate the size of fillet weld to be used.
Consult "New York State Steel Construction Manual" and "Standard Details for Highway Bridges" for weld size to plate thickness tables, types of welds and their appropriate location.
Always indicate type(s) of steel to be used.

Detailer:
Flange PL sizes may be shown on this dim. line.

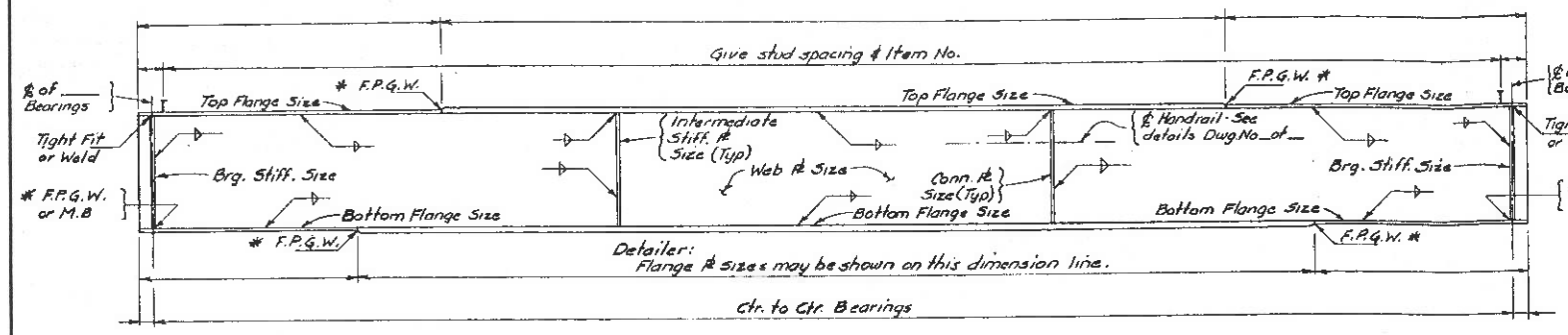

GIRDER DETAIL - SPAN 1
Not to Scale

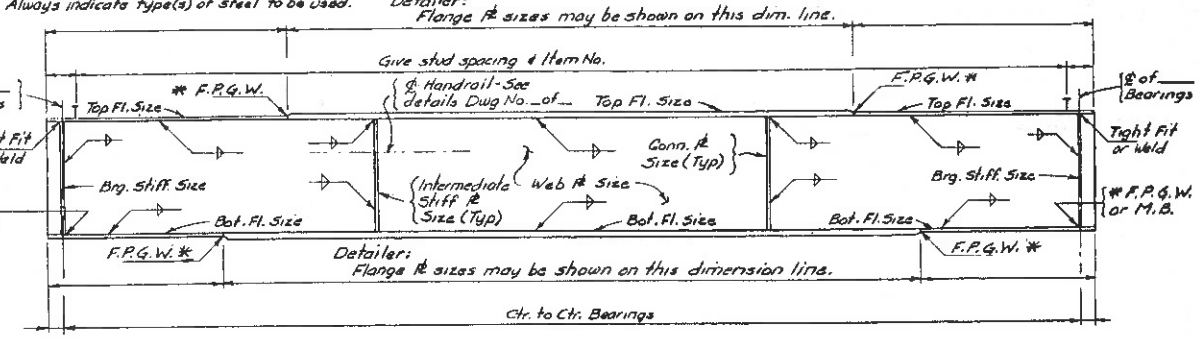

GIRDER DETAIL - SPAN 2
Not to Scale

Note:
The ends of all Girders and the Bearing Stiffeners shall be vertical. All Connection PL's and Intermediate Stiffeners may be perpendicular to the top flange.

{Give El. @ 1/4 pts for spans over 125'-0"} {See alternate table on GLD-G2}

HAUNCH TABLE SPAN 1		℄ BRG	MID PT	℄ BRG
Girder 1	(A) Req'd bottom of Slab Elevation			
	(B) Top of Steel El. (Field Meas.)			
	(C) = (A) - (B)			
	(D) Concrete + S.D.L. Deflection	—		—
	(E) Depth of Haunch required = (C) + (D) (ft)			
Girder 2	(A) Req'd bottom of Slab Elevation			
	(B) Top of Steel El. (Field Meas.)			
	(C) = (A) - (B)			
	(D) Concrete + S.D.L. Deflection	—		—
	(E) Depth of Haunch required = (C) + (D) (ft)			
Girder 3	(A) Req'd bottom of Slab Elevation			
	(B) Top of Steel El. (Field Meas.)			
	(C) = (A) - (B)			
	(D) Concrete + S.D.L. Deflection	—		—
	(E) Depth of Haunch required = (C) + (D) (ft)			
Girder 4	(A) Req'd bottom of Slab Elevation			
	(B) Top of Steel El. (Field Meas.)			
	(C) = (A) - (B)			
	(D) Concrete + S.D.L. Deflection	—		—
	(E) Depth of Haunch required = (C) + (D) (ft)			
Girder 5	(A) Req'd bottom of Slab Elevation			
	(B) Top of Steel El. (Field Meas.)			
	(C) = (A) - (B)			
	(D) Concrete + S.D.L. Deflection	—		—
	(E) Depth of Haunch required = (C) + (D) (ft)			
Girder 6	(A) Req'd bottom of Slab Elevation			
	(B) Top of Steel El. (Field Meas.)			
	(C) = (A) - (B)			
	(D) Concrete + S.D.L. Deflection	—		—
	(E) Depth of Haunch required = (C) + (D) (ft)			
Girder 7	(A) Req'd bottom of Slab Elevation			
	(B) Top of Steel El. (Field Meas.)			
	(C) = (A) - (B)			
	(D) Concrete + S.D.L. Deflection	—		—
	(E) Depth of Haunch required = (C) + (D) (ft)			

Detailer:
Enter values for (A) at ℄ Brgs. and Mid. Pt.
Enter values for (D) (the sum of (III) + (IV) from Camber Table) at Mid. Pt.

HAUNCH TABLE SPAN 2		℄ BRG	MID PT	℄ BRG
Girder 8	(A) Req'd bottom of Slab Elevation			
	(B) Top of Steel El. (Field Meas.)			
	(C) = (A) - (B)			
	(D) Concrete + S.D.L. Deflection	—		—
	(E) Depth of Haunch required = (C) + (D) (ft)			
Girder 9	(A) Req'd bottom of Slab Elevation			
	(B) Top of Steel El. (Field Meas.)			
	(C) = (A) - (B)			
	(D) Concrete + S.D.L. Deflection	—		—
	(E) Depth of Haunch required = (C) + (D) (ft)			
Girder 10	(A) Req'd bottom of Slab Elevation			
	(B) Top of Steel El. (Field Meas.)			
	(C) = (A) - (B)			
	(D) Concrete + S.D.L. Deflection	—		—
	(E) Depth of Haunch required = (C) + (D) (ft)			
Girder 11	(A) Req'd bottom of Slab Elevation			
	(B) Top of Steel El. (Field Meas.)			
	(C) = (A) - (B)			
	(D) Concrete + S.D.L. Deflection	—		—
	(E) Depth of Haunch required = (C) + (D) (ft)			
Girder 12	(A) Req'd bottom of Slab Elevation			
	(B) Top of Steel El. (Field Meas.)			
	(C) = (A) - (B)			
	(D) Concrete + S.D.L. Deflection	—		—
	(E) Depth of Haunch required = (C) + (D) (ft)			
Girder 13	(A) Req'd bottom of Slab Elevation			
	(B) Top of Steel El. (Field Meas.)			
	(C) = (A) - (B)			
	(D) Concrete + S.D.L. Deflection	—		—
	(E) Depth of Haunch required = (C) + (D) (ft)			
Girder 14	(A) Req'd bottom of Slab Elevation			
	(B) Top of Steel El. (Field Meas.)			
	(C) = (A) - (B)			
	(D) Concrete + S.D.L. Deflection	—		—
	(E) Depth of Haunch required = (C) + (D) (ft)			

Designer
This table supersedes Sup 1, page 51 of "Standard Details for Highway Bridges"

Designer/Detailer:
The Contract Plans shall show the design cambers for structural steel, concrete and superimposed dead load, vertical curve and total dead load plus vertical curve at the centerpoint of each stringer for spans under 125 feet and at quarter points for spans over 125 feet.

Typical for spans over 125'-0"

CAMBER TABLE SPAN 1		1/4 PT	MID PT	3/4 PT
Fascia Girder Camber	(I) Vertical Curve (ft.)			
	(II) Steel D.L. (ft.)			
	(III) Concrete D.L. (ft.)			
	(IV) Superimposed D.L. (ft.)			
	Total (ft.)			
Interior Girder Camber	(V) Vertical Curve (ft.)			
	(VI) Steel D.L. (ft.)			
	(VII) Concrete D.L. (ft.)			
	(VIII) Superimposed D.L. (ft.)			
	Total (ft.)			

SPAN 2		1/4 PT	MID PT	3/4 PT
Fascia Girder Camber	(I) Vertical Curve (ft.)			
	(II) Steel D.L. (ft.)			
	(III) Concrete D.L. (ft.)			
	(IV) Superimposed D.L. (ft.)			
	Total (ft.)			
Interior Girder Camber	(V) Vertical Curve (ft.)			
	(VI) Steel D.L. (ft.)			
	(VII) Concrete D.L. (ft.)			
	(VIII) Superimposed D.L. (ft.)			
	Total (ft.)			

Necessary only if different than 1/4 pt.

Detailer:
A schematic girder layout (type shown below) shall be shown so the user will not have to refer to other drawings for location and orientation.

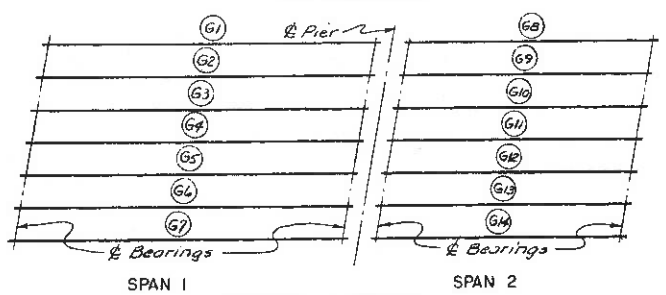

GIRDER LAYOUT
Not to Scale

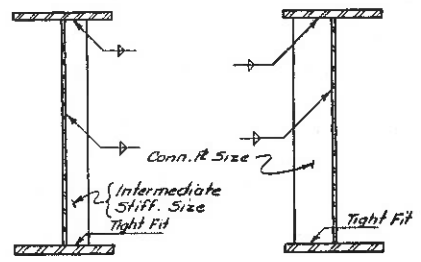

INTERMEDIATE STIFFENER — CONN. PL - FASCIA GIR.

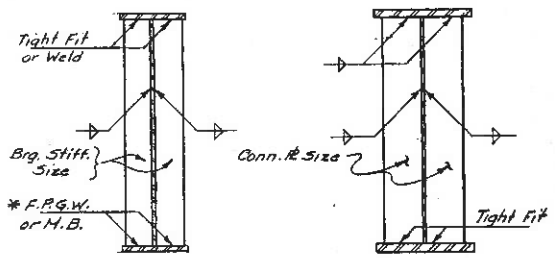

BRG. STIFF. — CONN. PL - INTERIOR GIR.

GIRDER SECTIONS
Scale 3/4" = 1'-0"

Notes:
For Handrail details see GLD-MS1.
For Stud Shear Connector Details see GLD-MS1.

DATE MADE
PROJECT ENGINEER
IN CHARGE OF
DESIGNED BY
DESIGN CHECKED BY
DETAILED BY
DETAIL CHECKED BY

STATE OF NEW YORK
DEPARTMENT OF TRANSPORTATION
DIVISION OF CONSTRUCTION

SAMPLE DETAIL - SUPERSTRUCTURE

WELDED PL GIRDER
DETAILS & TABLES

SIMPLE SPANS

DRAWING NO. GLD - G1

REVISED JULY 1976

FED. RD. REG. NO.	STATE	FEDERAL AID PROJECT NO.	SHEET NO.	TOTAL SHEETS
	NEW YORK			

FOR USE AS A GUIDE ONLY

CAPITAL PROJECT IDENTIFICATION NO.

Designer/Detailer:
If different girder configurations are required by design because of geometry or utilities, additional tables may be required.

MOMENT & SHEAR TABLE			℄ BRGS	MID SPAN
Girders 1 thru 7	DL	MOMENT		
		SHEAR		
	SDL	MOMENT		
		SHEAR		
	LL(+)	MOMENT		
		SHEAR		
Girders 8 thru 14	DL	MOMENT		
		SHEAR		
	SDL	MOMENT		
		SHEAR		
	LL(+)	MOMENT		
		SHEAR		

LL MOMENTS AND SHEARS INCLUDE IMPACT.
MOMENTS ARE EXPRESSED AS FOOT KIPS
SHEARS ARE EXPRESSED AS KIPS

Designer/Detailer
This Haunch Table is an alternate table to the one on GLD-G1.

HAUNCH TABLE

	GIRDER 1					GIRDER 2					GIRDER 3					GIRDER 4					GIRDER 5				
	℄ BRG	1/4 PT	MID PT	3/4 PT	℄ BRG	℄ BRG	1/4 PT	MID PT	3/4 PT	℄ BRG	℄ BRG	1/4 PT	MID PT	3/4 PT	℄ BRG	℄ BRG	1/4 PT	MID PT	3/4 PT	℄ BRG	℄ BRG	1/4 PT	MID PT	3/4 PT	℄ BRG
Ⓐ Req'd Bottom of Slab Elevation																									
Ⓑ Top of Steel El. (Field Measure)																									
Ⓒ = Ⓐ - Ⓑ																									
Ⓓ Concrete + S.D.L. Deflection																									
Ⓔ Depth of Haunch req'd + Ⓒ + Ⓓ (Ft.)																									

For Spans over 125'-0"

Designer
This table supersedes Sup. 1, page 51 of "Standard Details for Highway Bridges".

DESIGN LOAD TABLE / GIRDER

	UNIT	LOAD/FT	
D.L.	Slab	____ K/ft.	
	Haunch	____ K/ft.	
	Girder	____ K/ft.	
	S.I.P. Forms	____ K/ft.	← If applicable
	Diaphragms	____ K/ft.	
	Utilities	____ K/ft.	← If applicable
	Total	____ K/ft.	
S.D.L.	Safety or Sidewalks	____ K/ft.	
	Railing or Parapet	____ K/ft.	
	Future W.S.	____ K/ft.	
	Total	____ K/ft.	

Designer/Detailer:
This table shall be given to the nearest one thousandth of a Kip.

Assumed Live Load - (use applicable loading i.e. HS20-44)

This area reserved for notes

DATE MADE .....
PROJECT ENGINEER .....
IN CHARGE OF .....
DESIGNED BY .....
DESIGN CHECKED BY .....
DETAILED BY .....
DETAIL CHECKED BY .....

STATE OF NEW YORK
DEPARTMENT OF TRANSPORTATION
DIVISION OF CONSTRUCTION

SAMPLE DETAILS - SUPERSTRUCTURE

WELDED ℞ GIRDER TABLES

SIMPLE SPANS

DRAWING NO. GLD-G2

REVISED JULY 1976

FED. RD. REG. NO.	STATE	FEDERAL AID PROJECT NO.	SHEET NO.	TOTAL SHEETS
	NEW YORK			

FOR USE AS A GUIDE ONLY

CAPITAL PROJECT IDENTIFICATION NO.

Welding Notes
* F.P.G.W. = Full Penetration Groove Weld
M.B. = Mill to bear

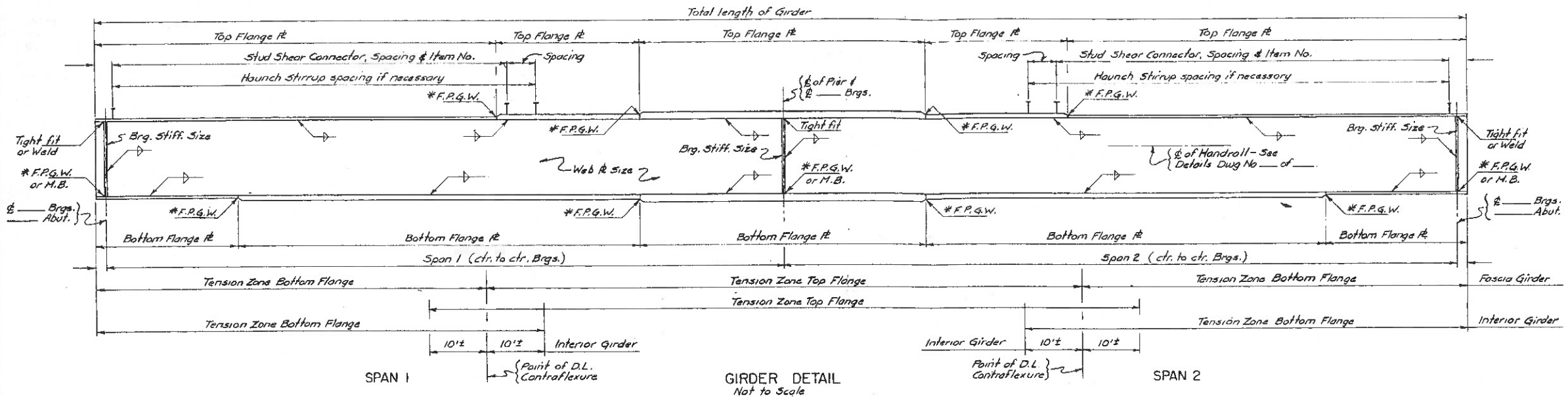

GIRDER DETAIL
Not to Scale

Detailer:
If the stud spacing is different for each Girder a table such as the one shown on GLD-G1 may be used.
If the stud spacing is similar for each Girder the spacing may be shown on Girder Detail as indicated.
Always indicate the size of fillet weld to be used.
Consult "New York State Steel Construction Manual" and "Standard Details for Highway Bridges" for weld size to plate thickness tables, types of welds and their appropriate location.
Always indicate type(s) of steel to be used.

Designer:
Continuous Girders must be capable of being spliced at points D.L. Inflection.

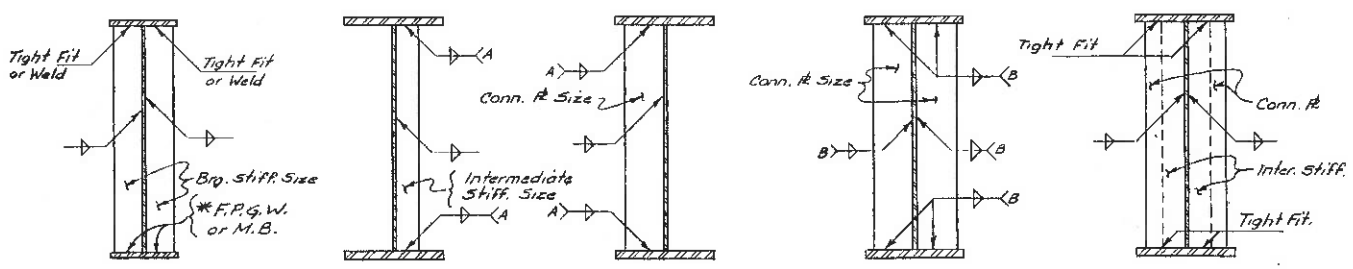

GIRDER SECTIONS
Not to Scale

Welding Note "A"
No welding of stiffeners or connection plates to tension flanges. Plates shall be "tight fit."
Welding Note "B"
All connection plates used in pairs shall be welded to the web and be placed paint tight against both flanges. This may be accomplished by cutting the connection plates ⅛" short and then placing the connection plate tightly against the tension flange and welding the opposite end to the compression flange. Fitted connection plates shall not be driven in place with sufficient force to distort the flange, web or connection plates

Notes:
For Handrail Details see GLD-M51
For Stud Shear Connector Details see GLD-M51.
For Girder Tables see GLD-G4 & GLD-G5
For Schematic Girder Layout see GLD-G4
For details of Flange Width and Thickness Transition see GLD-M51.

Detailer:
Include this note.

Note to the Contractor:
Within the tension zones delineated, there shall be no welding permitted other than what is detailed on the plans. Welding for the attachment of forms, ties, etc. shall not be permitted.

DATE MADE
PROJECT ENGINEER
IN CHARGE OF
DESIGNED BY
DESIGN CHECKED BY
DETAILED BY
DETAIL CHECKED BY

STATE OF NEW YORK
DEPARTMENT OF TRANSPORTATION
DIVISION OF CONSTRUCTION

SAMPLE DETAIL — SUPERSTRUCTURE

WELDED ℞ GIRDER DETAILS
STRAIGHT GIRDER

CONTINUOUS SPANS

DRAWING NO. GLD-G3

REVISED JULY 1976

FED. RD. REG. NO.	STATE	FEDERAL AID PROJECT NO.	SHEET NO.	TOTAL SHEETS
	NEW YORK			

FOR USE AS A GUIDE ONLY

CAPITAL PROJECT IDENTIFICATION NO.

{Designer/Detailer: Actual location of Inflection points to be determined by design}

MOMENT & SHEAR TABLE			℄ BRGS ABUTMENT	$0.1L_1$	$0.2L_1$	$0.3L_1$	$0.4L_1$	$0.5L_1$	$0.6L_1$	D.L. INFL. POINT	$0.7L_1$	$0.8L_1$	$0.9L_1$	℄ BRGS. PIER	$0.1L_2$	$0.2L_2$	$0.3L_2$	D.L. INFL. POINT	$0.4L_2$	$0.5L_2$	$0.6L_2$	$0.7L_2$	$0.8L_2$	$0.9L_2$	℄ BRGS ABUTMENT
Girder 1	DL	MOMENT																							
		SHEAR																							
	SDL	MOMENT																							
		SHEAR																							
	LL(+)	MOMENT																							
		SHEAR																							
	LL(−)	MOMENT																							
		SHEAR																							
Girder 2	DL	MOMENT																							
		SHEAR																							
	SDL	MOMENT																							
		SHEAR																							
	LL(+)	MOMENT																							
		SHEAR																							
	LL(−)	MOMENT																							
		SHEAR																							
Girder 3	DL	MOMENT																							
		SHEAR																							
	SDL	MOMENT																							
		SHEAR																							
	LL(+)	MOMENT																							
		SHEAR																							
	LL(−)	MOMENT																							
		SHEAR																							
Girder 4	DL	MOMENT																							
		SHEAR																							
	SDL	MOMENT																							
		SHEAR																							
	LL(+)	MOMENT																							
		SHEAR																							
	LL(−)	MOMENT																							
		SHEAR																							

LL MOMENTS AND SHEARS INCLUDE IMPACT – BOTH SPANS.

MOMENTS ARE EXPRESSED AS FOOT KIPS

SHEARS ARE EXPRESSED AS KIPS

{Designer/Detailer: Actual location of Inflection Points to be determined by design}

CAMBER TABLE		℄ BRGS. ABUTMENT	$0.1L_1$	$0.2L_1$	$0.3L_1$	$0.4L_1$	$0.5L_1$	$0.6L_1$	D.L. INFL. POINT	$0.7L_1$	$0.8L_1$	$0.9L_1$	℄ BRGS. PIER	$0.1L_2$	$0.2L_2$	$0.3L_2$	D.L. INFL. POINT	$0.4L_2$	$0.5L_2$	$0.6L_2$	$0.7L_2$	$0.8L_2$	$0.9L_2$	℄ BRGS. ABUTMENT
Girder 1	(I) Steel D.L. (ft.)																							
	(II) Concrete D.L. (ft.)																							
	(III) Superimposed D.L. (ft.)																							
	(IV) Vertical Curve (ft.)																							
	Total = (I) + (II) + (III) + (IV) (ft.)																							
Girder 2	(I) Steel D.L. (ft.)																							
	(II) Concrete D.L. (ft.)																							
	(III) Superimposed D.L. (ft.)																							
	(IV) Vertical Curve (ft.)																							
	Total = (I) + (II) + (III) + (IV) (ft.)																							
Girder 3	(I) Steel D.L. (ft.)																							
	(II) Concrete D.L. (ft.)																							
	(III) Superimposed D.L. (ft.)																							
	(IV) Vertical Curve (ft.)																							
	Total = (I) + (II) + (III) + (IV) (ft.)																							
Girder 4	(I) Steel D.L. (ft.)																							
	(II) Concrete D.L. (ft.)																							
	(III) Superimposed D.L. (ft.)																							
	(IV) Vertical Curve (ft.)																							
	Total = (I) + (II) + (III) + (IV) (ft.)																							

Designer:
Tables shown are for 2 span continuous girders, tables may be expanded for 3 span and 4 span continuous girders.

Designer/Detailer:
The Contract Plans shall show the design cambers for structural steel, concrete and superimposed dead load, vertical curve and total dead load plus vertical curve at inflection points and at tenth points of spans.
The Camber Table shown here is for use when there is a difference in camber between fascia girder and interior girder, etc. If, by design, the girders are similar, it will not be necessary to list each girder seperately.

Notes:
For "Girder Layout Plan" see GLD-G4

PROJECT ENGINEER
IN CHARGE OF
DESIGNED BY
DESIGN CHECKED BY
DETAILED BY
DETAIL CHECKED BY

STATE OF NEW YORK
DEPARTMENT OF TRANSPORTATION
DIVISION OF CONSTRUCTION

SAMPLE DETAIL – SUPERSTRUCTURE

MOMENT-SHEAR & CAMBER TABLES
CONTINUOUS WELDED PL GIRDER

DRAWING NO. GLD-G5

GRAPHIC CONTROLS CORP. DU PONT CRONAPAQUE

REVISED JULY 1976

FED. RD. REG. NO.	STATE	FEDERAL AID PROJECT NO.	SHEET NO.	TOTAL SHEETS
	NEW YORK			

FOR USE AS A GUIDE ONLY

CAPITAL PROJECT IDENTIFICATION NO.

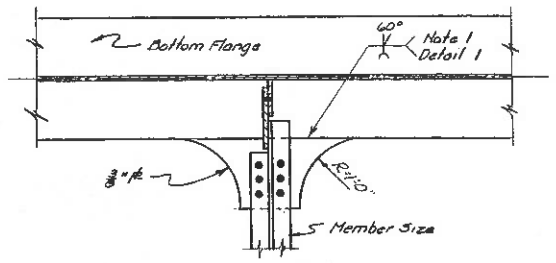

DETAIL "A"
Scale 3/8"=1'0"

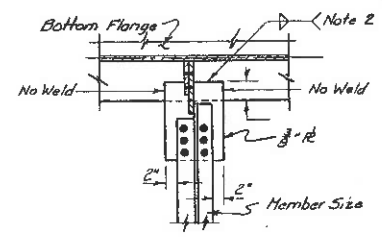

DETAIL "E"
Scale 3/8"=1'0"

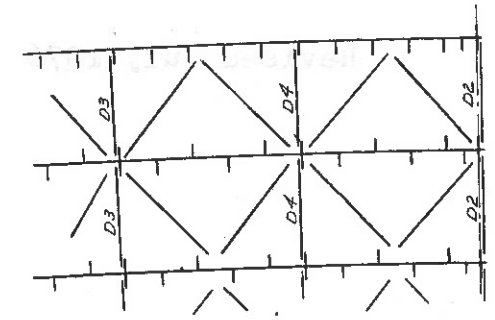

PARTIAL ALTERNATE FRAMING PLAN
Scale 1/8"=1'0"

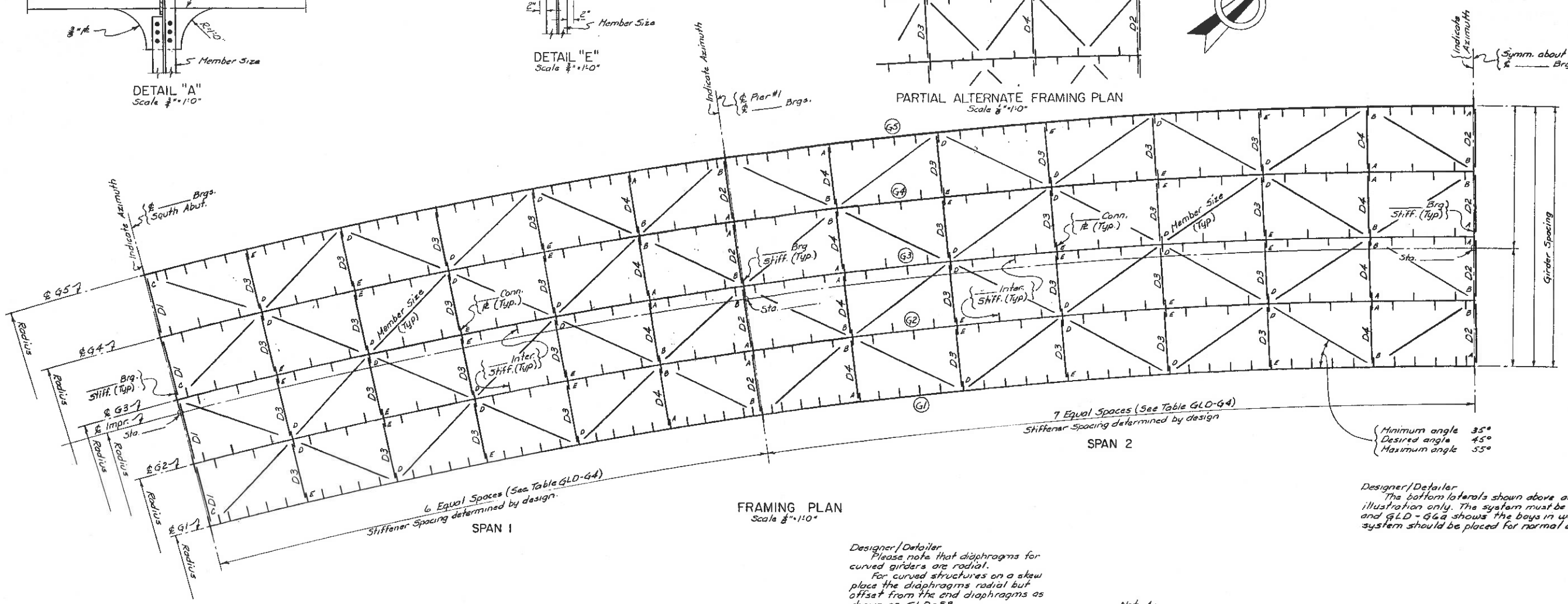

FRAMING PLAN
Scale 1/8"=1'0"

Designer/Detailer
The bottom laterals shown above are for illustration only. The system must be designed and GLD-G6a shows the bays in which the system should be placed for normal conditions

Designer/Detailer
Please note that diaphragms for curved girders are radial.
For curved structures on a skew place the diaphragms radial but offset from the end diaphragms as shown on GLD-S3

Note 1:
The Gusset ℞ shall be prepared and welded as a single bevel groove weld as shown on Detail "1". It shall be then Air-Carbon-Arc gouged from the second side into sound weld metal and then welded as detailed. All welding shall be in the flat or downhand position using 250° minimum preheat and interpass temperatures.

Note 2:
Care shall be taken when welding lapped gusset plates to the flanges of the plate girders, especially at the start and end of fillet welds to insure complete fusion at the root and that weld craters are properly filled. All welding shall be performed using 250° minimum preheat and interpass temperatures.

Notes:
Field welding to the lateral gusset plates will not be permitted.
The gusset plate may be of any shape that will provide after welding, cutting and finish grinding a smooth transition from the flange edge at a minimum radius of 12 inches.
For additional information and details consult appropriate BDD Sheet.
For Transverse Section see GLD-S4

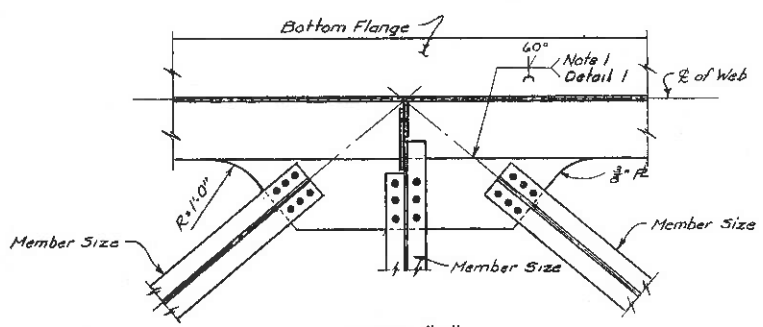

DETAIL "B"
Scale 3/8"=1'0"

Designer/Detailer
Connections shown are representative only and governing factors such as geometry may dictate a change of connection type used.

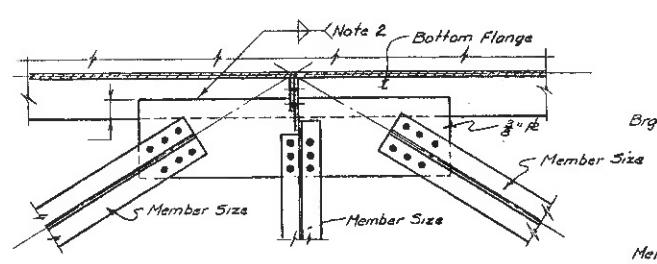

DETAIL "D"
Scale 3/8"=1'0"

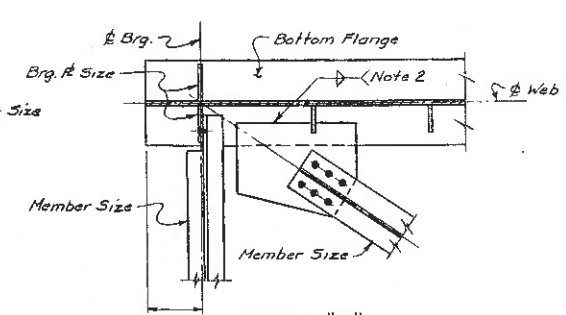

DETAIL "C"
Scale 3/8"=1'0"

Designer/Detailer
The type of lateral connection plates indicated are descriptive and the use of them is predicated upon the design.

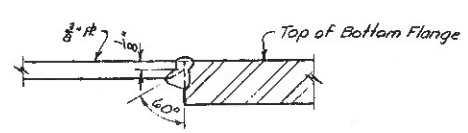

DETAIL "1"
Not to Scale

DATE MADE
PROJECT ENGINEER
IN CHARGE OF
DESIGNED BY
DESIGN CHECKED BY
DETAILED BY
DETAIL CHECKED BY

STATE OF NEW YORK
DEPARTMENT OF TRANSPORTATION
DIVISION OF CONSTRUCTION

SAMPLE DETAIL — SUPERSTRUCTURE

FRAMING PLAN & BOTTOM LATERAL CONNECTIONS CURVED GIRDER

CONTINUOUS SPANS

DRAWING NO. GLD-G6

REVISED JULY 1976

FED. RD. REQ. NO.	STATE	FEDERAL AID PROJECT NO.	SHEET NO.	TOTAL SHEETS
	NEW YORK			

FOR USE AS A GUIDE ONLY

CAPITAL PROJECT IDENTIFICATION NO.

Welding Notes.
* F.P.G.W. = Full Penetration Groove Weld

Designer:
Continuous girders must be capable of being spliced at those Dead Load Inflection points that could be used in either a practical shipping or erection plan.

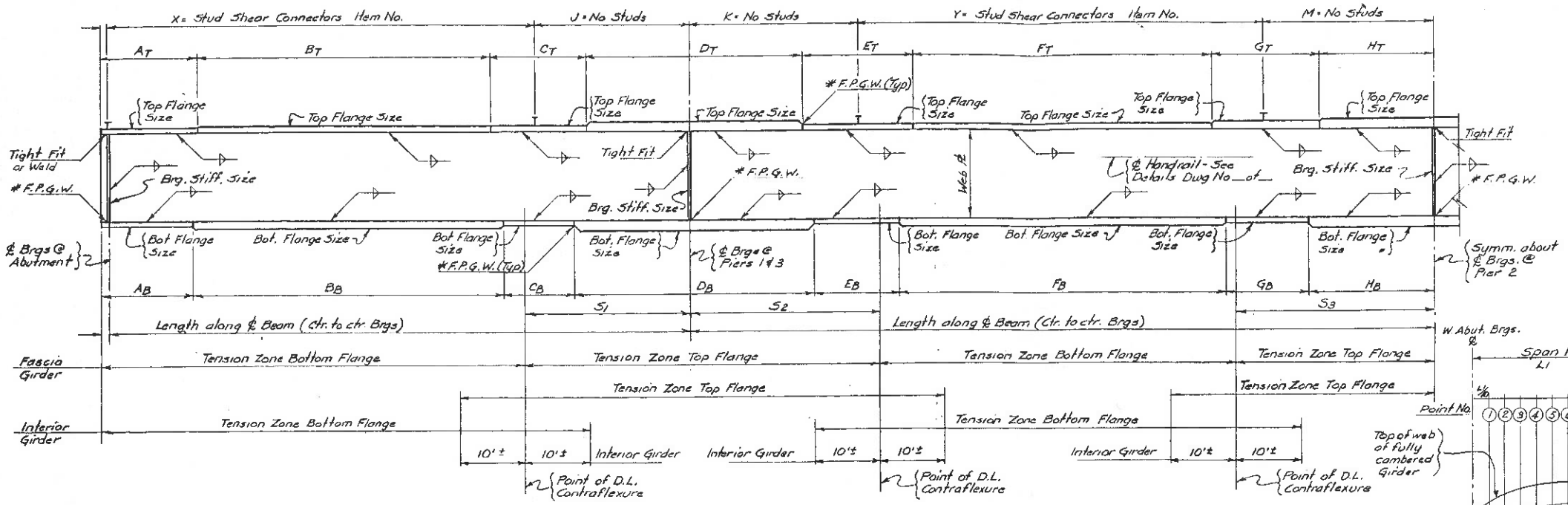

GIRDER DETAIL
Not to Scale

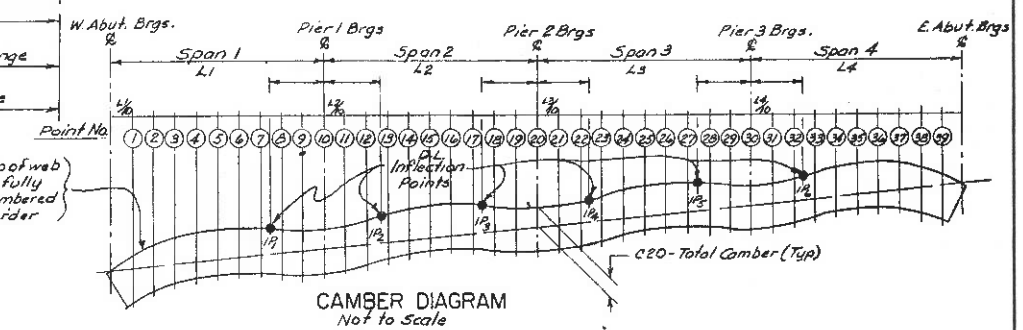

CAMBER DIAGRAM
Not to Scale

GIRDER SCHEDULE

MARK	RADIUS OF CURVATURE	SPANS 1 & 4		SPANS 2 & 3		TOTALS OF FOUR SPANS	D.L. PT. OF CONTRAFLEXURE			SHEAR CONNECTORS — LENGTH					TOP FLANGE LENGTH								BOTTOM FLANGE LENGTH							
		LGTH.	DIA. SPNG.	LGTH.	DIA. SPNG.		S_1	S_2	S_3	X	J	K	Y	M	A_T	B_T	C_T	D_T	E_T	F_T	G_T	H_T	A_B	B_B	C_B	D_B	E_B	F_B	G_B	H_B
G1																														
G2																														
G3																														
G4																														
G5																														

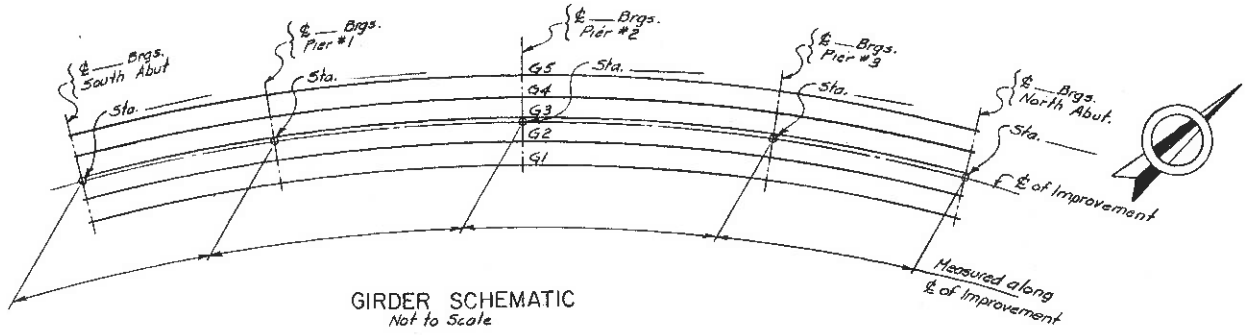

GIRDER SCHEMATIC
Not to Scale

Notes:
For Handrail details see GLD-M51.
For Stud Shear Connector Details see GLD-M51
For Slab Haunch Table see GLD-M52.
For Girder Sections see GLD-G3
For details of Flange Width and Thickness Transition see GLD-M51
For DESIGN LOAD TABLE/GIRDER see GLD-G4

Detailer:
Include this note.

Note to the Contractor:
Within the tension zones delineated, there shall be no welding permitted other than what is detailed on the plans. Welding for the attachment of forms, ties, etc. shall not be permitted.

DATE MADE
PROJECT ENGINEER
IN CHARGE OF
DESIGNED BY
DESIGN CHECKED BY
DETAILED BY
DETAIL CHECKED BY

STATE OF NEW YORK
DEPARTMENT OF TRANSPORTATION
DIVISION OF CONSTRUCTION

SAMPLE DETAIL — SUPERSTRUCTURE

WELDED ℞ GIRDER DETAILS
CURVED GIRDER

CONTINUOUS SPANS

DRAWING NO. GLD - G7

REVISED JULY 1976

FED. RD. REG. NO.	STATE	FEDERAL AID PROJECT NO.	SHEET NO.	TOTAL SHEETS
	NEW YORK			

FOR USE AS A GUIDE ONLY

CAPITAL PROJECT IDENTIFICATION NO.

◉ Denotes combination of Station Line & Working Line.

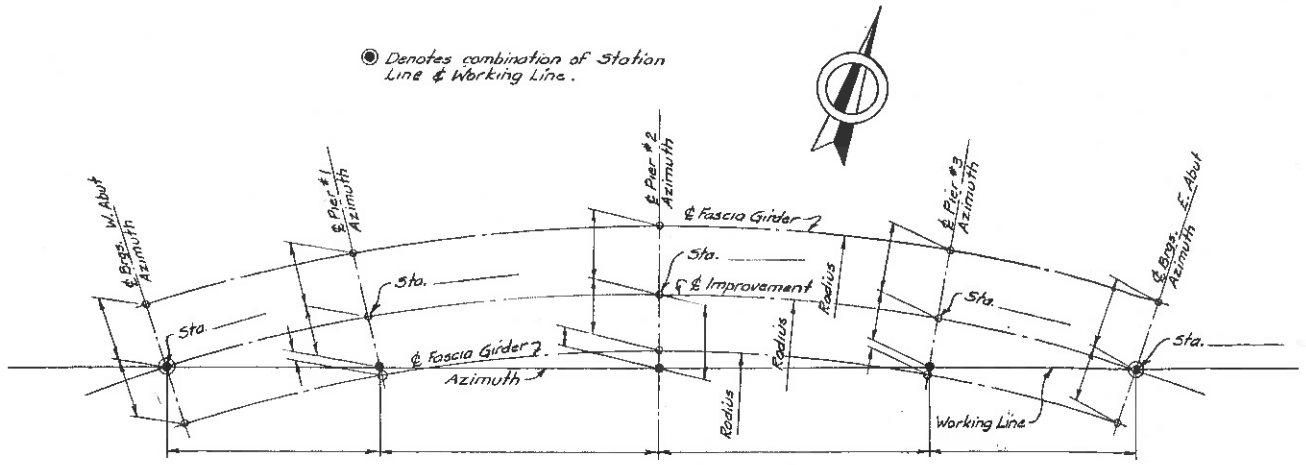

CURVED BRIDGE SCHEMATIC LAYOUT
CURVED GIRDER
Not to Scale

Designer/Detailer
Please note that in both schematic drawings the ℄ of pier is shown radial. If the ℄ of pier is skewed in your particular structure the schematic layout would reflect this but dimensioning would remain basically the same as that shown.

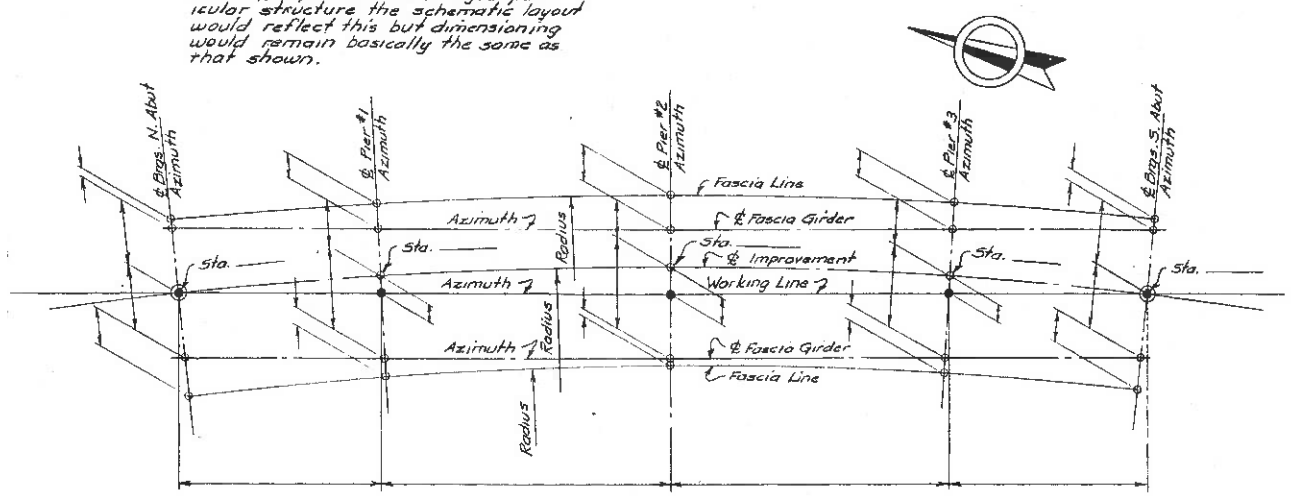

CURVED BRIDGE SCHEMATIC LAYOUT
STRAIGHT GIRDER
Not to Scale

Designer/Detailer
In detailing the schematic layout for Continuous Prestressed Girders it may be necessary to increase the size of the detail to clearly show the location and offsets for the pier bearings. This may may also be accomplished with a separate schematic for the piers and bearings.
For Continuous steel girders this system of straight girders would be considered a special case. Consult EI 74-71 for further information.

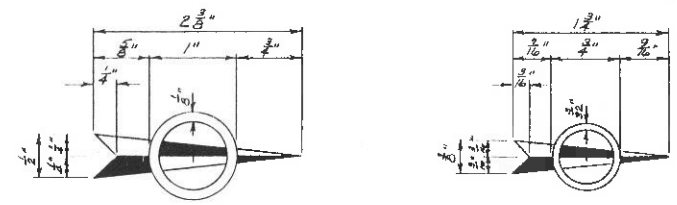

STANDARD NORTH ARROWS
Full Scale

Designer/Detailer
Although it is required that all rails span at least 3 posts, provision has been made for when it is necessary to only span 2. One of the posts shall be a "Special Post as shown on the appropriate BDD Sheet.

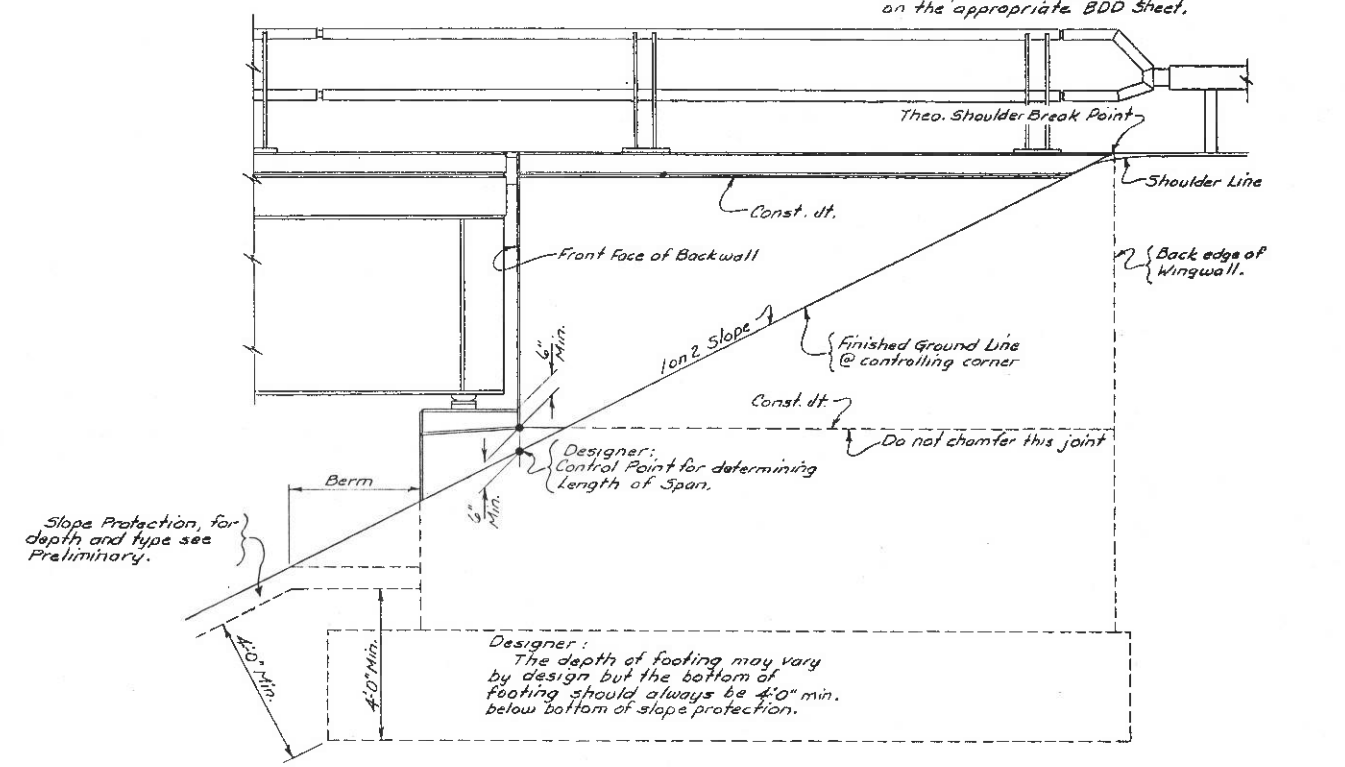

OPEN FACED WINGWALL ELEVATION
Scale: 1/2" = 1'-0"

This area reserved for notes

DATE MADE
PROJECT ENGINEER
IN CHARGE OF
DESIGNED BY
DESIGN CHECKED BY
DETAILED BY
DETAIL CHECKED BY

STATE OF NEW YORK
DEPARTMENT OF TRANSPORTATION
DIVISION OF CONSTRUCTION

SAMPLE DETAIL – MISCELLANEOUS

CURVED BRIDGE LAYOUT & OPEN WINGWALL ELEVATION

CONTINUOUS & SIMPLE SPANS

DRAWING NO. GLD-MB1

REVISED JULY 1976

FED. RD. REG. NO.	STATE	FEDERAL AID PROJECT NO.	SHEET NO.	TOTAL SHEETS
	NEW YORK			

FOR USE AS A GUIDE ONLY

CAPITAL PROJECT IDENTIFICATION NO.

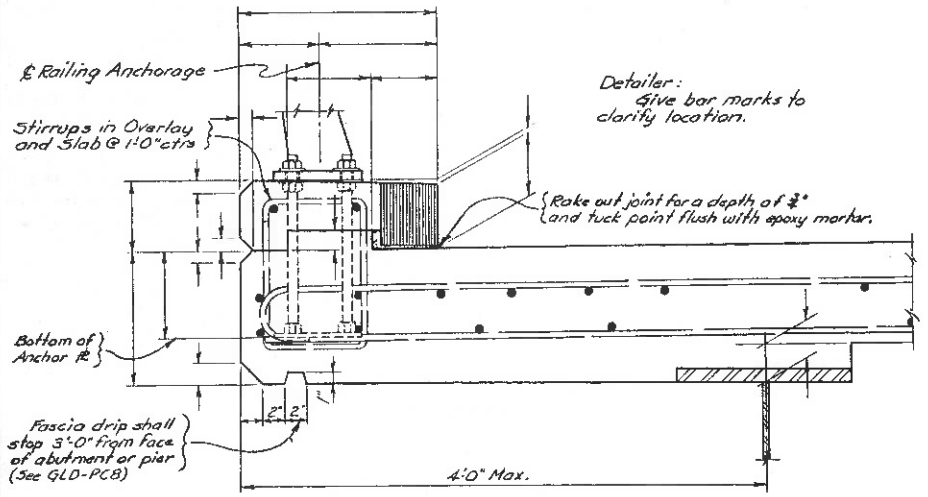

FASCIA DETAIL (LARGE OVERHANG)
Scale 1½" = 1'-0"

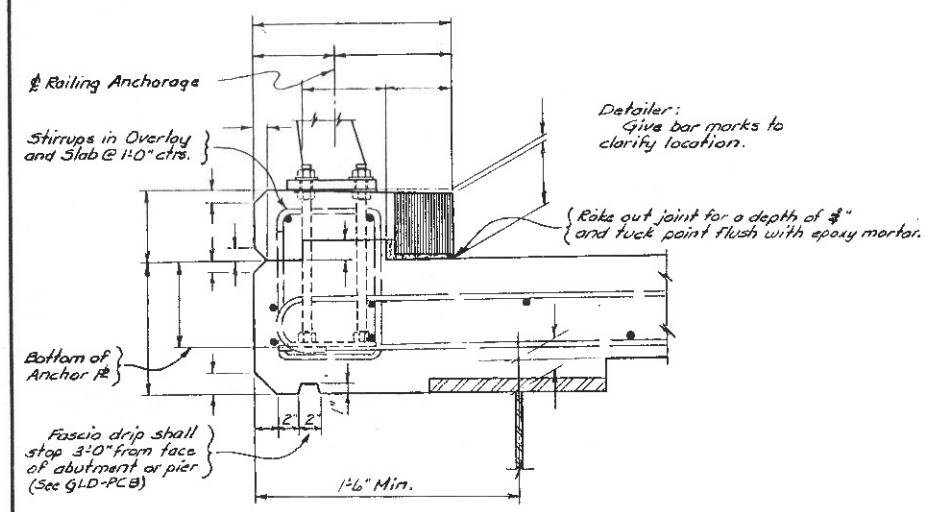

FASCIA DETAIL (SMALL OVERHANG)
Scale 1½" = 1'-0"

Designer / Detailer
The longitudinal joint in the slab may be located as shown or over the girder flange depending upon purpose for which the joint is needed.

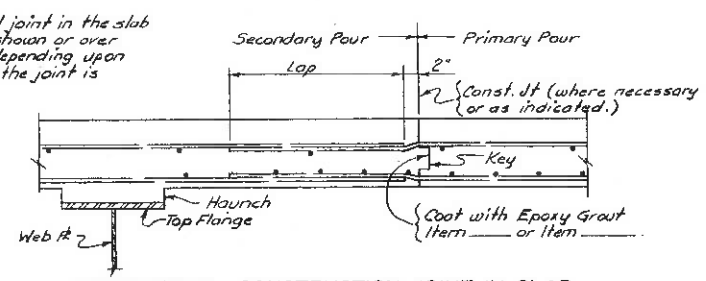

LONGITUDINAL CONSTRUCTION JOINT IN SLAB
Scale 1" = 1'-0"

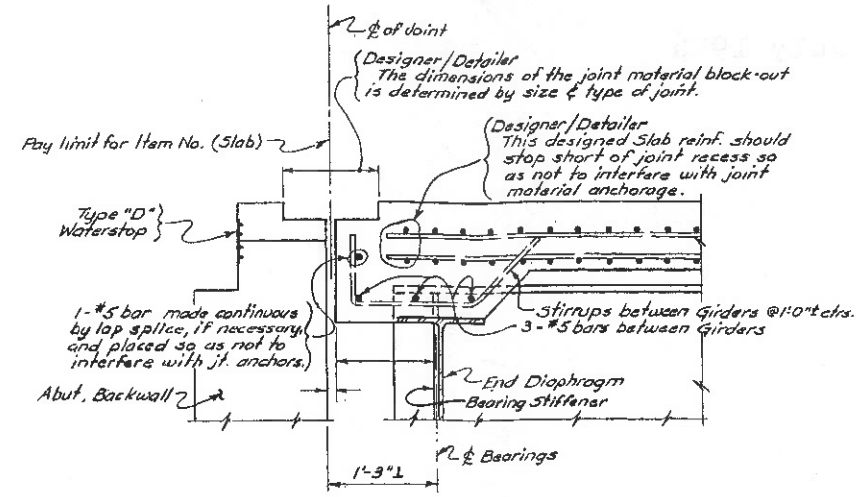

SLAB HAUNCH DETAIL (AT ABUTMENT)
Scale 1" = 1'-0"

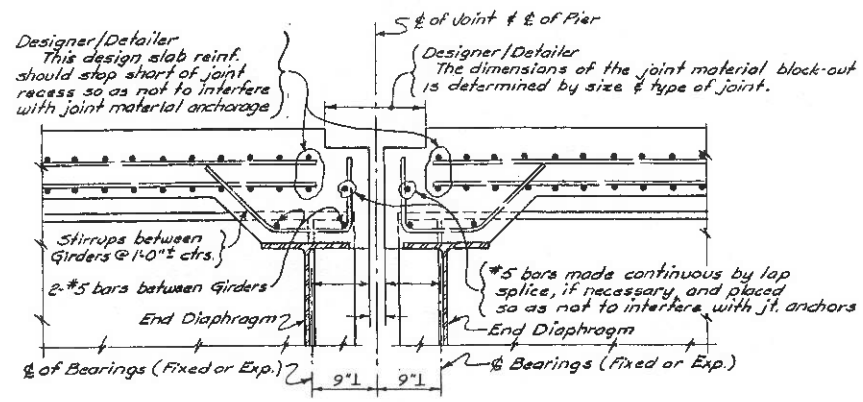

SLAB HAUNCH DETAIL (AT PIER)
Scale 1" = 1'-0"

Designer / Detailer
If a pouring sequence is indicated on plans or it is felt a transverse const. jt. in the slab may be necessary during construction this detail should be incorporated in slab details.

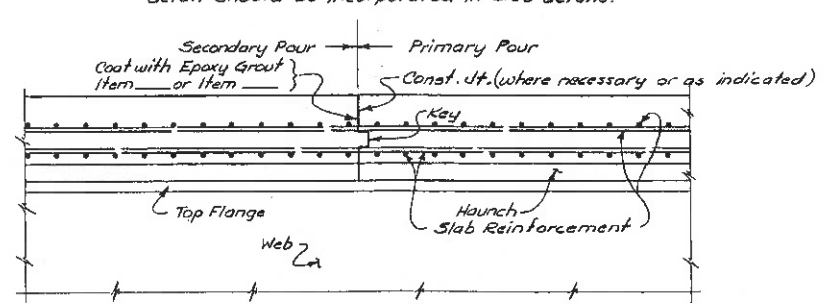

TRANSVERSE CONSTRUCTION JOINT IN SLAB
Scale 1" = 1'-0"

Designer / Detailer
The haunch dimension for rolled beams shall be from theoretical bottom of slab to top of top flange, all other haunches shall be shown as indicated here.

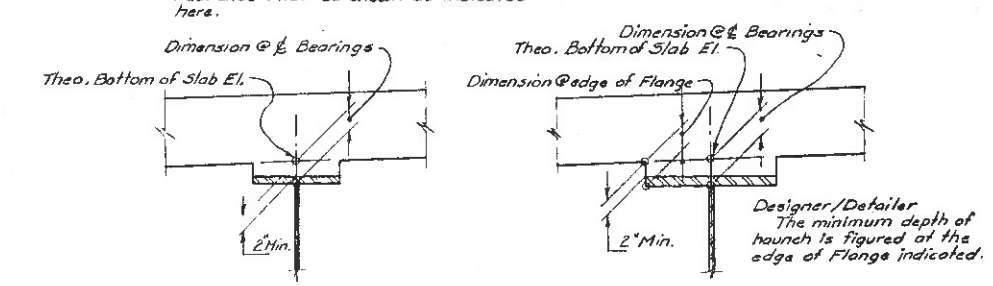

FLANGE UNDER 16" FLANGE 16" & OVER

GIRDER HAUNCH DETAIL
Scale 1" = 1'-0"

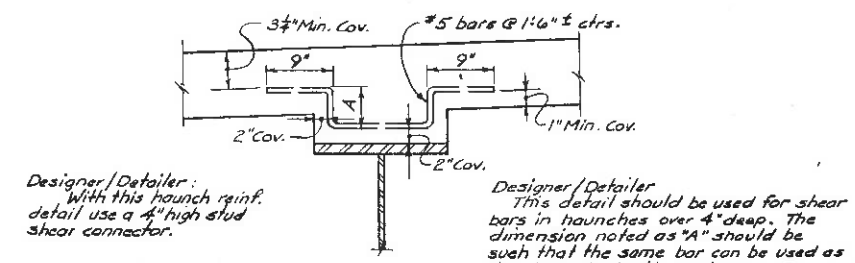

REINFORCED GIRDER HAUNCH DETAIL
Scale 1" = 1'-0"

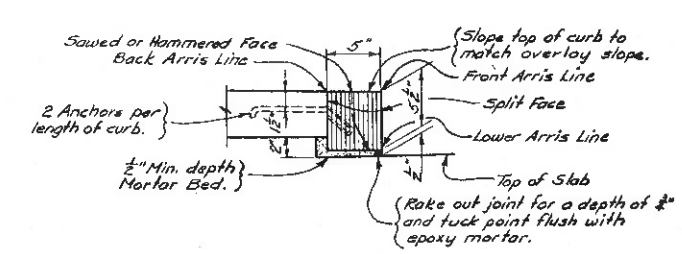

DETAIL OF GRANITE CURB - TYPE F1
Not to Scale

Notes:
For Scupper details see appropriate BDD sheet.
For additional haunch information refer to "Standard Details for Highway Bridges."

DATE MADE	
PROJECT ENGINEER	
IN CHARGE OF	
DESIGNED BY	
DESIGN CHECKED BY	
DETAILED BY	
DETAIL CHECKED BY	

STATE OF NEW YORK
DEPARTMENT OF TRANSPORTATION
DIVISION OF CONSTRUCTION

SAMPLE DETAIL — SUPERSTRUCTURE

FASCIA AND HAUNCH DETAILS

SIMPLE SPANS
CONTINUOUS SPANS

DRAWING NO. GLD - MC1

REVISED JULY 1976

FED. RD. REG. NO.	STATE	FEDERAL AID PROJECT NO.	SHEET NO.	TOTAL SHEETS
	NEW YORK			

FOR USE AS A GUIDE ONLY

CAPITAL PROJECT IDENTIFICATION NO.

Handrail shall be placed thru stiffeners on both sides of Interior Girders, and thru stiffeners on inside face of Fascia Girders.
The cost of furnishing and placing the bar, couplings, set screws, H.S. bolts and Clip Angles shall be paid for under Item _____.

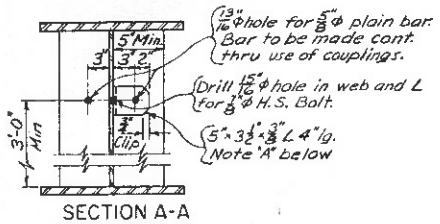

SECTION A-A

Note "A" - Use clip angle midway between stiffeners if stiffener spacing is 8'-0" or greater.

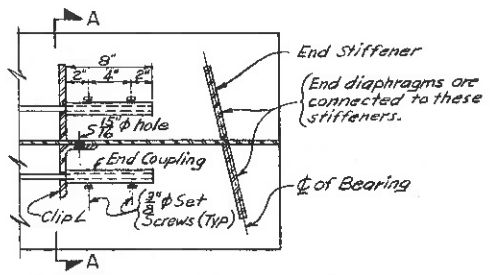

PARTIAL PLAN - SKEW UP TO 30°

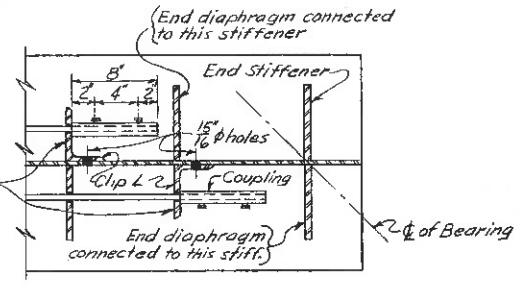

Provide a clip angle if a full depth stiffener is not required at this location

When unpainted A588 steel is used in the superstructure, the hand rail shall be A588 and the couplings galvanized in accordance with specifications.

PARTIAL PLAN - SKEW OVER 30°

DETAILS FOR FIELD ERECTED SAFETY HANDRAIL
Not to Scale

Detailer:
Use handrail when web depth is 48" or greater.

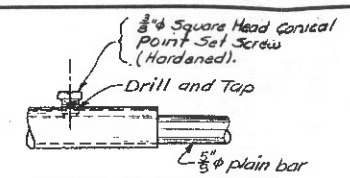

DETAIL AT SET SCREW

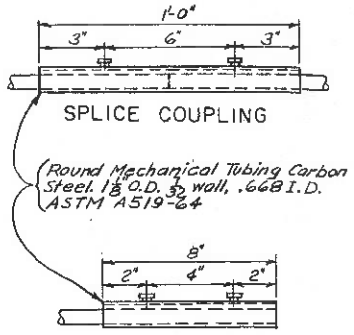

SPLICE COUPLING

END COUPLING

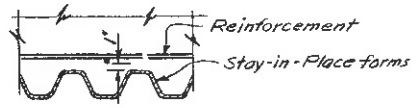

SECTION A-A

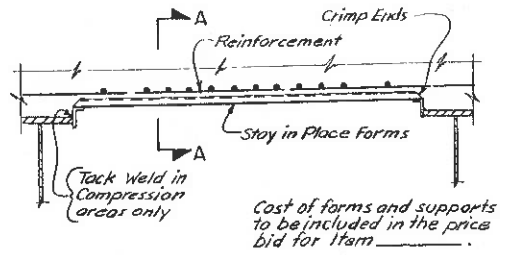

DETAILS OF STAY-IN-PLACE FORMS
Not to Scale

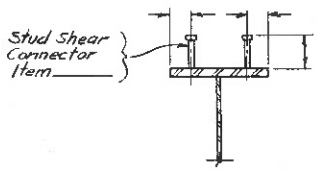

STUD SHEAR CONNECTOR DETAIL
Not to Scale

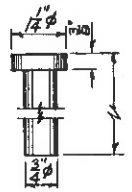

DETAIL OF STUD
Not to Scale

Designer / Detailer
"Details for Shop Erected Safety Handrail" shall always be included in the contract plans.
Whenever a splice in the girder is indicated or continuous girders are called for, "Details for Field Erected Safety Handrail" shall also be included.

Handrail shall be placed thru stiffeners on both sides of Interior Girders and thru stiffeners on inside face of Fascia Girders.
The cost of furnishing and placing the bar, bar splices, 3/4" nuts, H.S. Bolts and Clip Angles shall be paid for under Item _____.

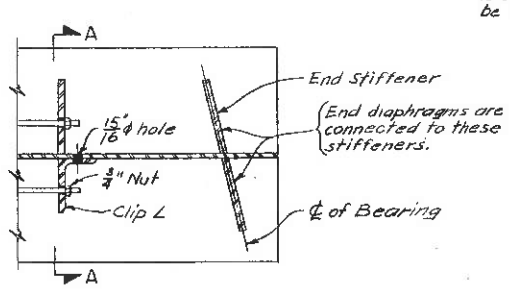

PARTIAL PLAN - SKEW UP TO 30°

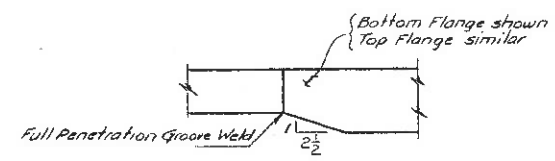

FLANGE THICKNESS TAPER
NO SCALE

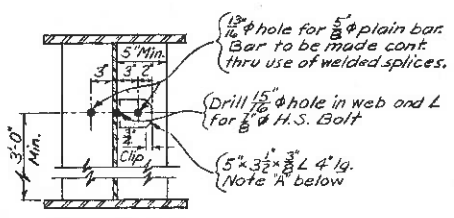

SECTION A-A

Note "A" - Use clip angle midway between stiffeners if stiffener spacing is 8'-0" or greater.

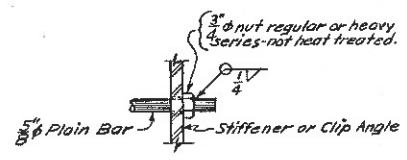

END CONNECTION DETAIL

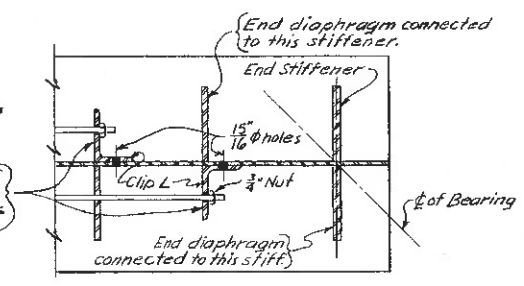

Provide a clip angle if a full depth stiffener is not required at this location.

When unpainted A588 steel is used in the superstructure, the handrail shall be A588 and the couplings galvanized in accordance with specifications.

PARTIAL PLAN - SKEW OVER 30°

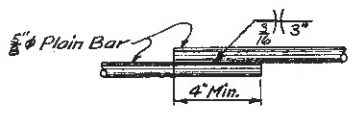

WELDED SPLICE DETAIL

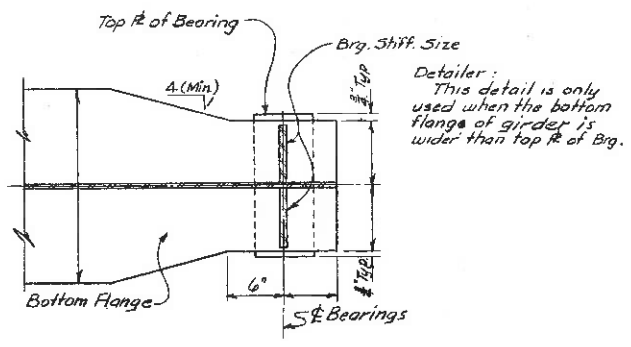

Detailer:
This detail is only used when the bottom flange of girder is wider than top ℞ of Brg.

BOTTOM FLANGE TAPER
Not to Scale

DETAILS FOR SHOP ERECTED SAFETY HANDRAIL
Not to Scale

Detailer:
Use handrail when web depth is 48" or greater.

This area reserved for notes

DATE MADE.....
PROJECT ENGINEER.....
IN CHARGE OF.....
DESIGNED BY.....
DESIGN CHECKED BY.....
DETAILED BY.....
DETAIL CHECKED BY.....

STATE OF NEW YORK
DEPARTMENT OF TRANSPORTATION
DIVISION OF CONSTRUCTION

SAMPLE DETAIL - SUPERSTRUCTURE

MISCELLANEOUS WELDED ℞ GIRDER DETAILS

SIMPLE SPANS
CONTINUOUS SPANS

DRAWING NO. GLD-MS1

REVISED JULY 1976

FED. RD. REG. NO.	STATE	FEDERAL AID PROJECT NO.	SHEET NO.	TOTAL SHEETS
	NEW YORK			

FOR USE AS A GUIDE ONLY

CAPITAL PROJECT IDENTIFICATION NO.

Detailer:
The following information should be listed on this detail:
1. Design Pile Loads =
2. Estimated Pile Length =

Detailer:
Please note the pile numbering sequence.

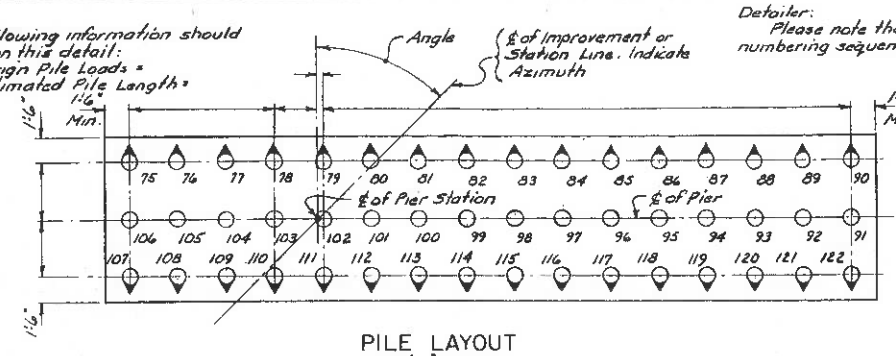

PILE LAYOUT
Scale 3/16" = 1'-0"

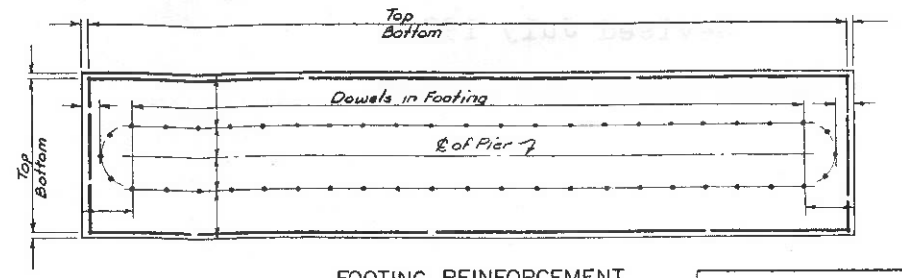

FOOTING REINFORCEMENT
Scale 3/16" = 1'-0"

REINF. & CONCRETE TABLE			

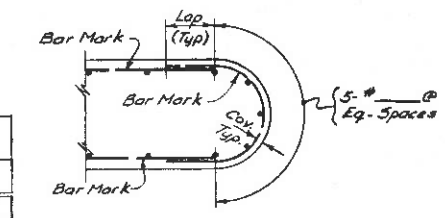

SECTION A-A
Scale 3/8" = 1'-0"

LEGEND
○ Cast-in-Place Pile - Item No.
Battered C.I.P. Pile - Indicate Batter

Detailer:
Use only appropriate symbols in legend.

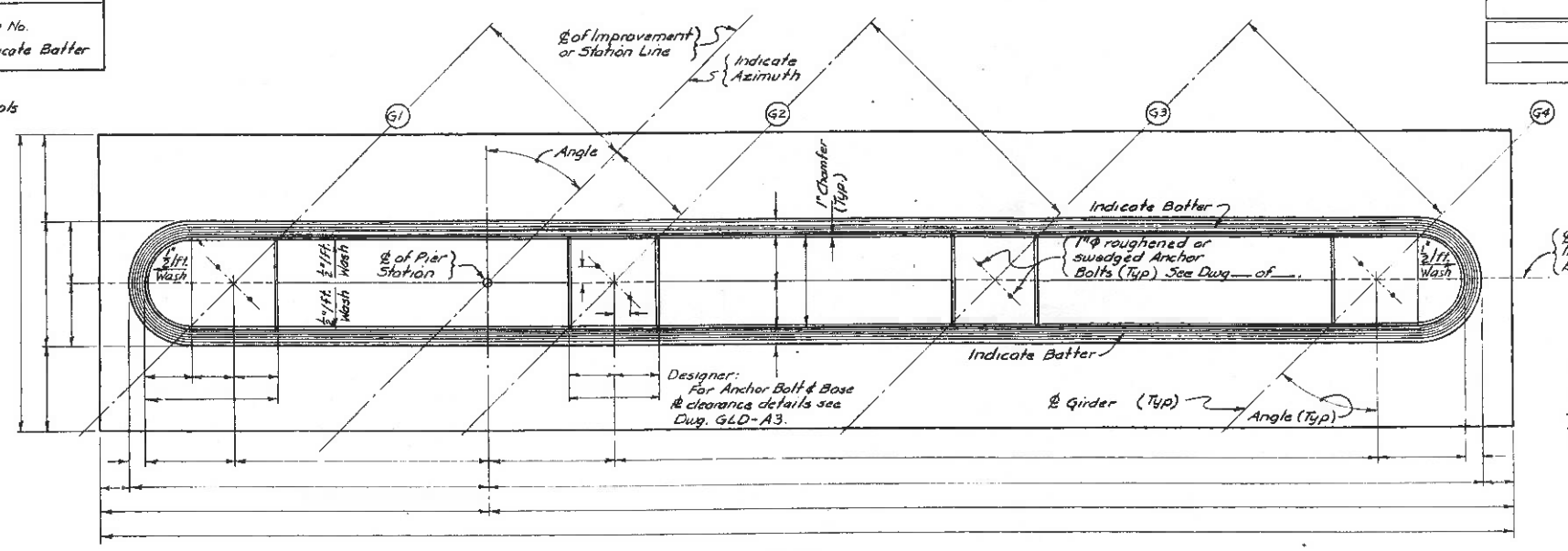

PLAN
Scale 3/8" = 1'-0"

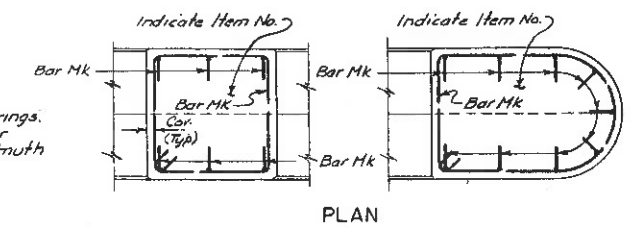

PLAN

℄ of Pier & ℄ Bearings. Indicate Fixed or Expansion & Azimuth

Detailer:
The Pier Pedestal reinforcement is the same size as that shown for the Abutment Pedestal, Dwg GLD-A3

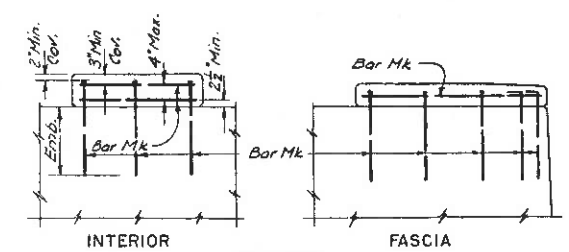

SECTION
PEDESTAL REINFORCEMENT
Scale 1/2" = 1'-0"

Detailer:
All reinforcement to be verified by Designer.

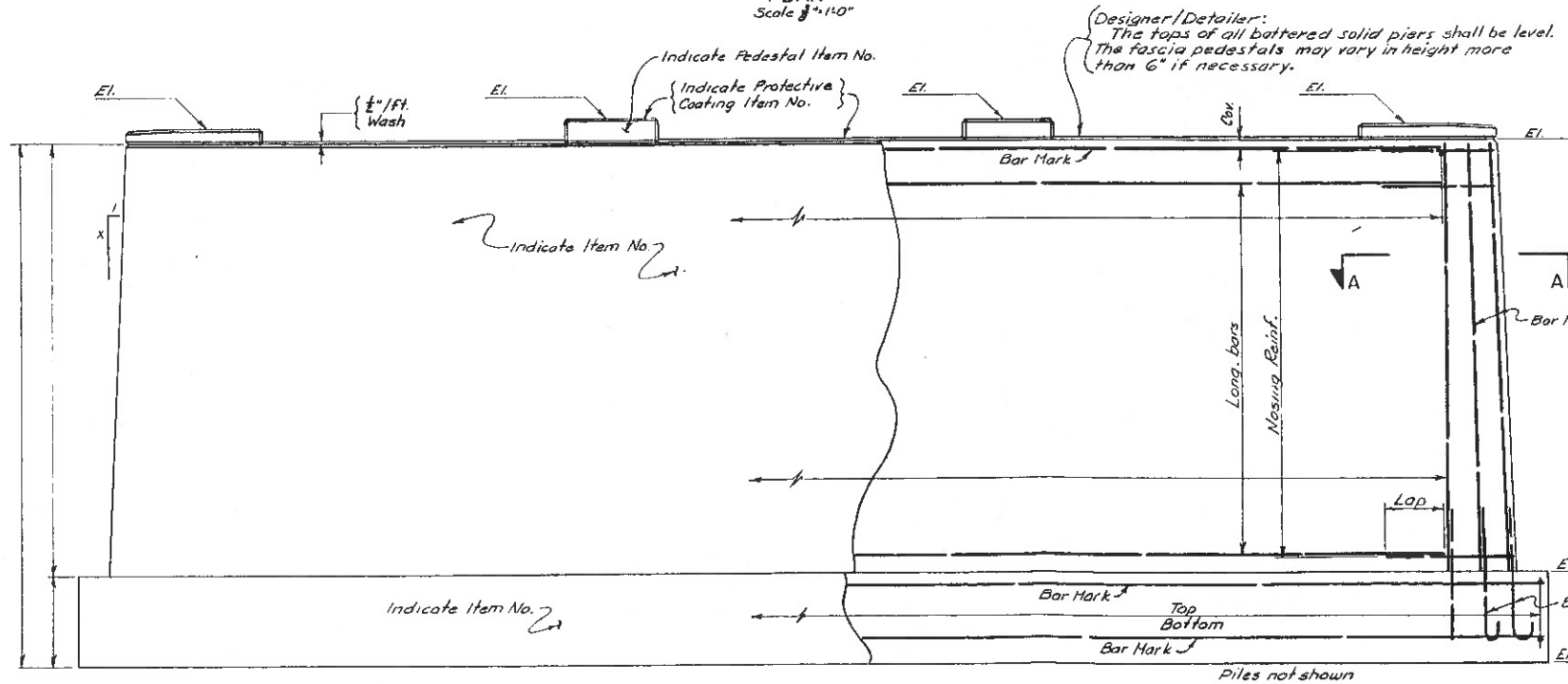

ELEVATION
Scale 3/8" = 1'-0"

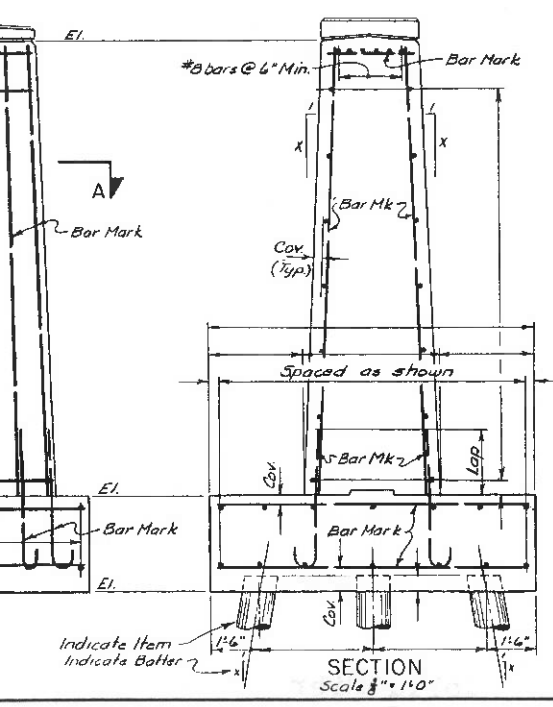

SECTION
Scale 3/8" = 1'-0"

Notes:
For C.I.P. Pile Reinforcement, Reinforced Bearing Pile Tip and Steel Splice for Bearing Piles see GLD-A5.
For C.I.P. Pile Splice Details see GLD-A7a.

PROJECT ENGINEER	
IN CHARGE OF	
DESIGNED BY	
DESIGN CHECKED BY	
DETAILED BY	
DETAIL CHECKED BY	

STATE OF NEW YORK
DEPARTMENT OF TRANSPORTATION
DIVISION OF CONSTRUCTION

SAMPLE DETAIL — SUBSTRUCTURE

SOLID PIER ON PILES

DRAWING NO. GLD-PI

REVISED JULY 1976

GRAPHIC CONTROLS CORP. DU PONT 10FA (RETROFILM 888-6) 18441

FED. RD. REG. NO.	STATE	FEDERAL AID PROJECT NO.	SHEET NO.	TOTAL SHEETS
	NEW YORK			

FOR USE AS A GUIDE ONLY

CAPITAL PROJECT IDENTIFICATION NO.

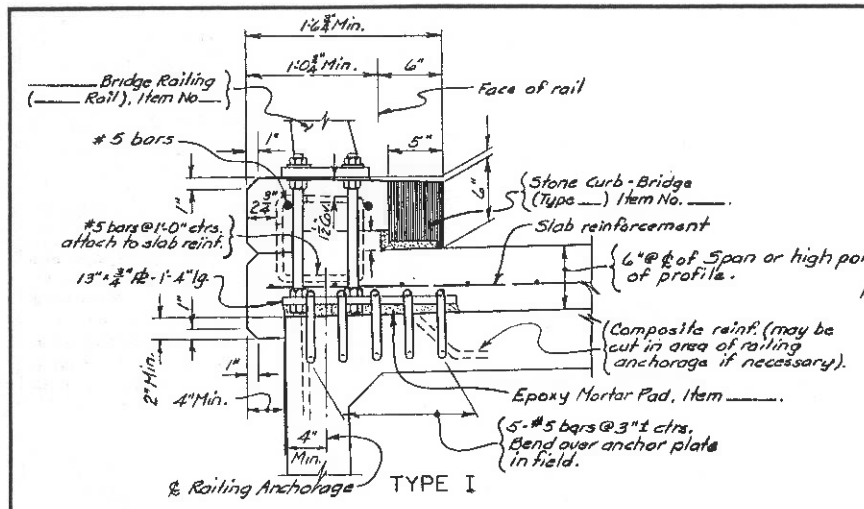

TYPE I

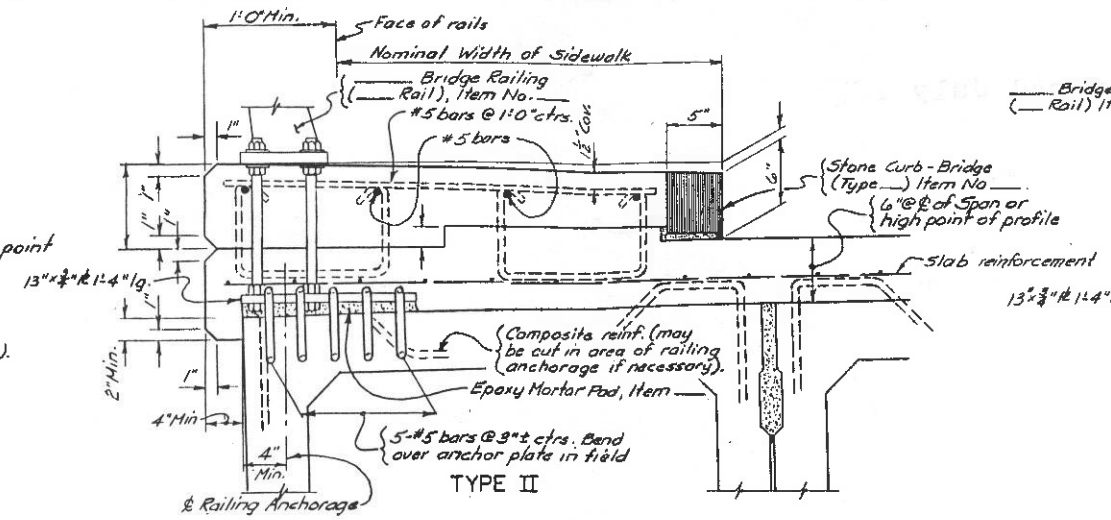

TYPE II

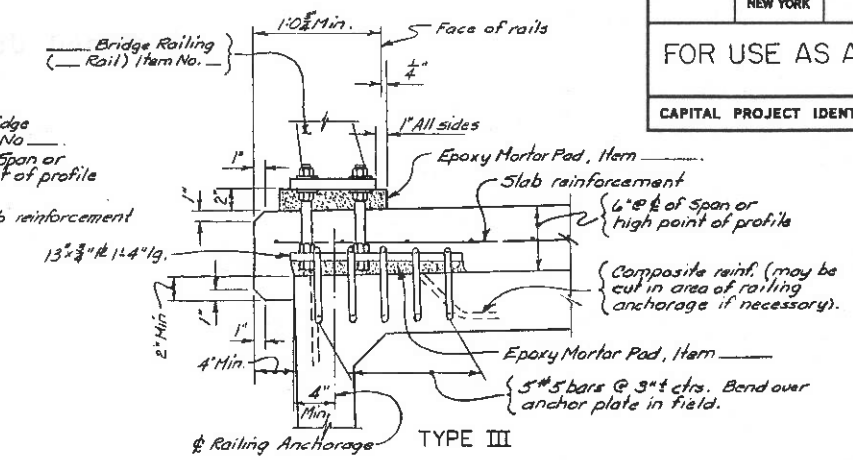

TYPE III

All reinforcement to be verified by designer.

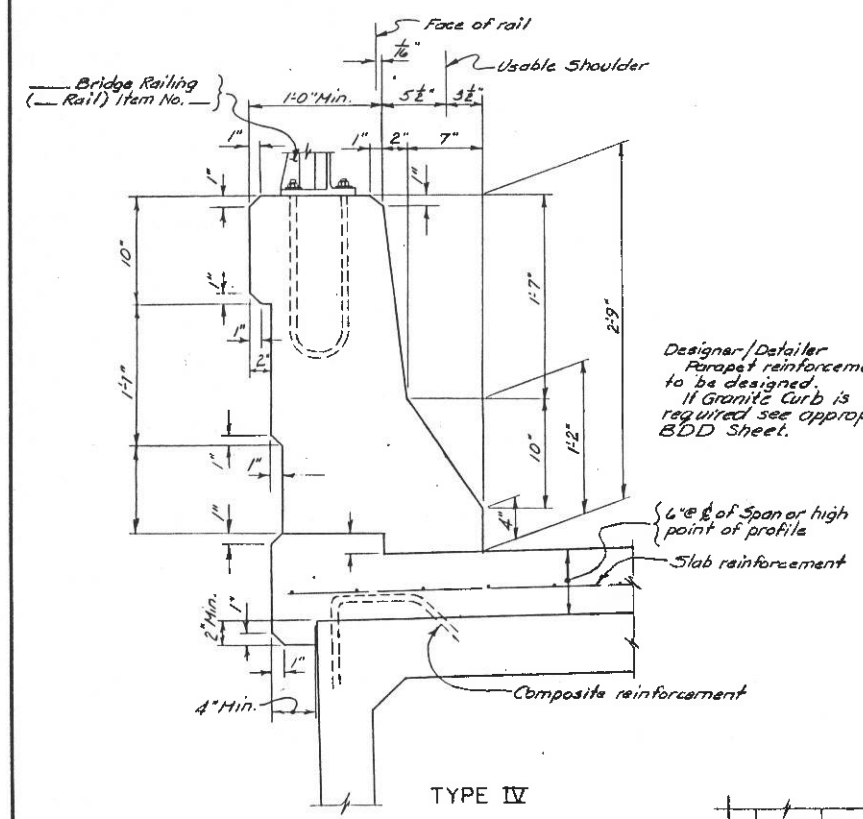

TYPE IV

Designer/Detailer
In all cases the base plate for the railing anchorage assembly must rest fully on the box beam.

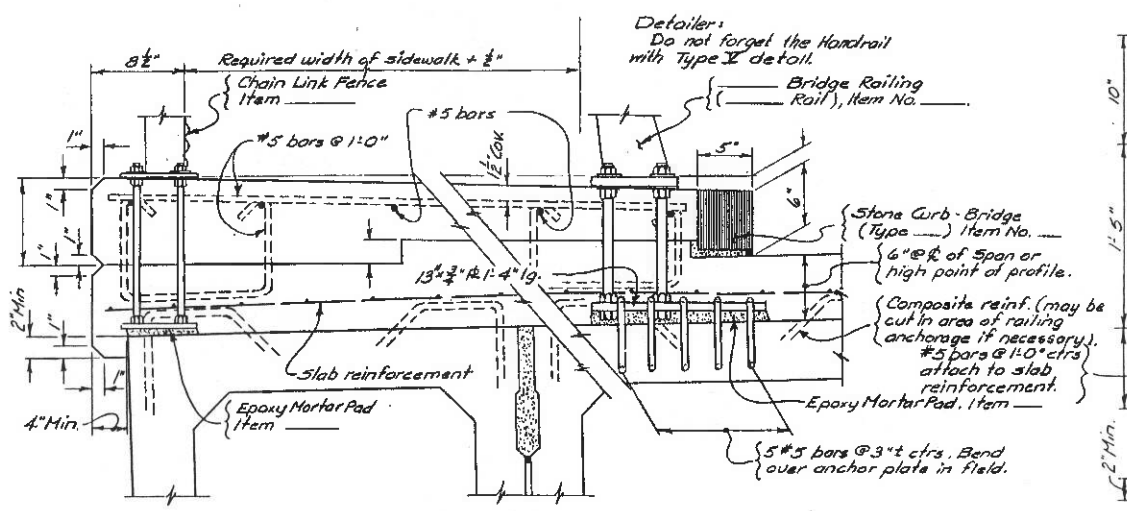

TYPE V

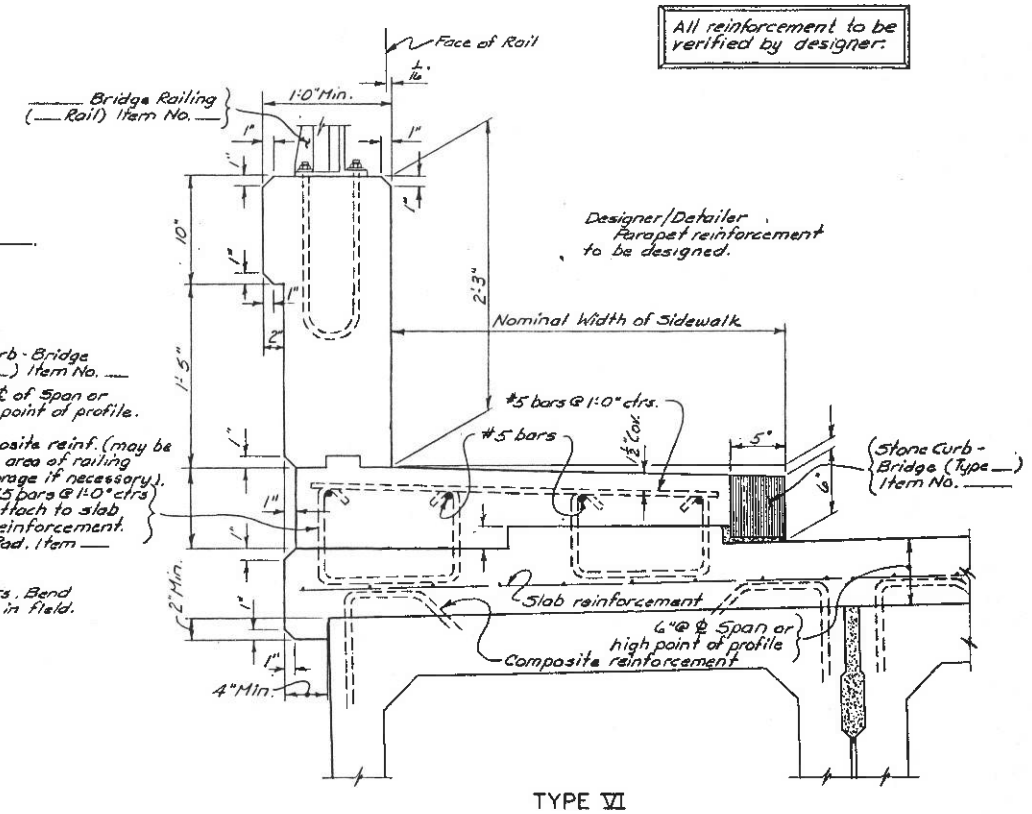

TYPE VI

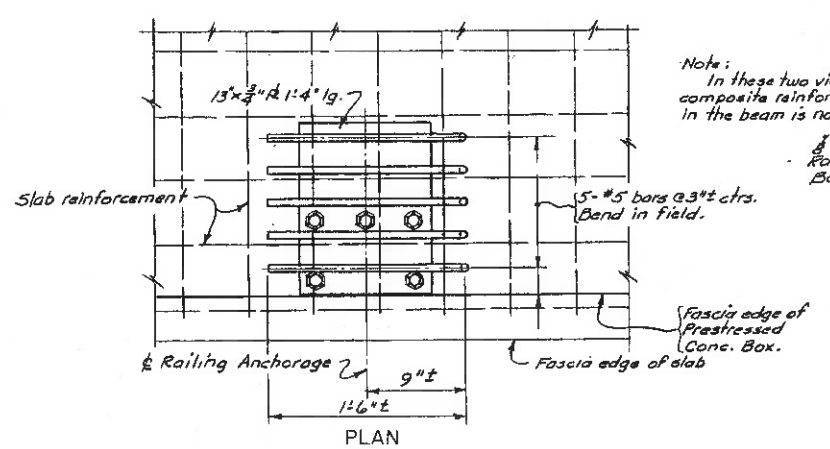

PLAN

Note: In these two views the composite reinforcement in the beam is not shown.

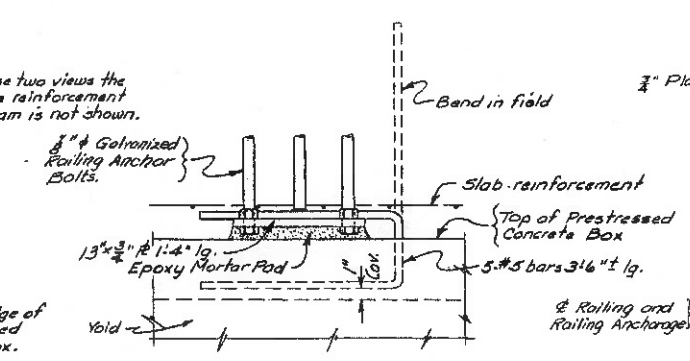

ELEVATION

RAILING ANCHORAGE REINFORCEMENT

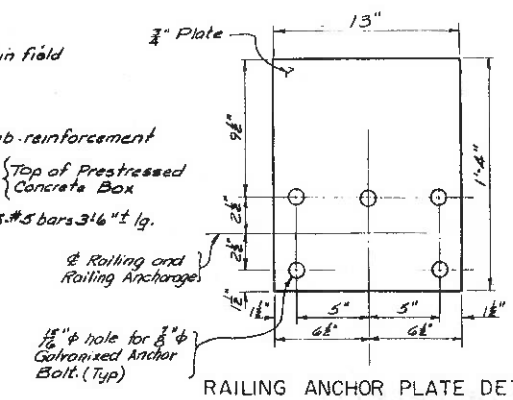

RAILING ANCHOR PLATE DETAIL

This area reserved for notes

DATE MADE
PROJECT ENGINEER
IN CHARGE OF
DESIGNED BY
DESIGN CHECKED BY
DETAILED BY
DETAIL CHECKED BY

STATE OF NEW YORK
DEPARTMENT OF TRANSPORTATION
DIVISION OF CONSTRUCTION

SAMPLE DETAIL – SUPERSTRUCTURE

FASCIA DETAILS
SIDEWALKS, PARAPETS & CURBS
PRESTRESSED BOX UNITS

DRAWING NO. GLD-PC1

REVISED JULY 1976

FED. RD. REG. NO.	STATE	FEDERAL AID PROJECT NO.	SHEET NO.	TOTAL SHEETS
	NEW YORK			

FOR USE AS A GUIDE ONLY

CAPITAL PROJECT IDENTIFICATION NO.

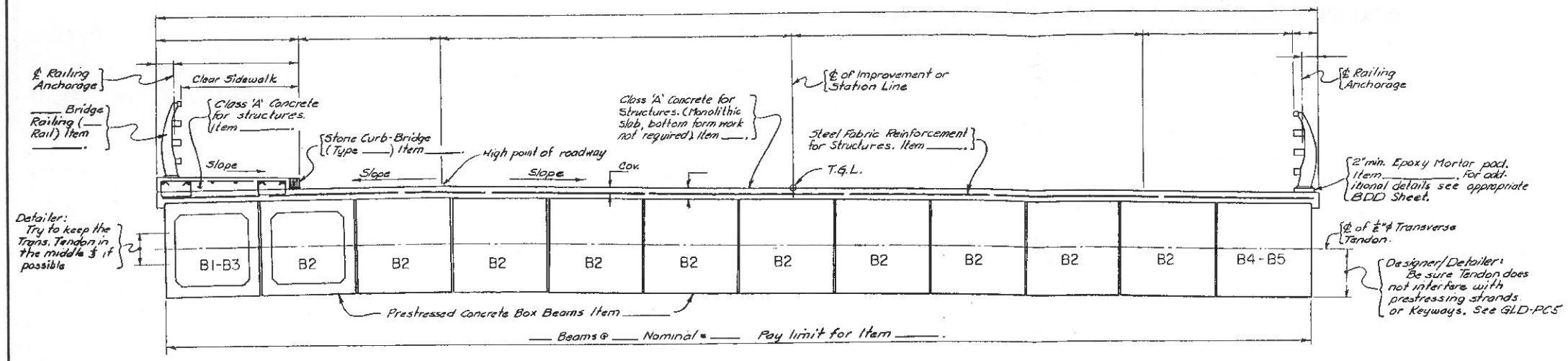

Designer/Detailer:
Indicate the number of Box Beams, their sizes and number of joints between them.
Widths of box beams shall be detailed as 4'-0" or 3'-0". The beam deck shall consist of (1) multiples of 4'-0" beams, or (2) multiples of 3'-0" beams, or (3) a combination of 4'-0" beams and a minimum number of 3'-0" beams. The beam deck shall be selected in the order listed. The overall beam deck width shall be the sum of the nominal beam widths plus ½" min. per joint or ¾" max. per joint. Under no circumstances shall the joint between beams exceed ¾".

TRANSVERSE SECTION
Scale ⅜" = 1'-0"

Designer/Detailer

Internal Diaphragms
Midspan for spans up to 50'
Midspan & quarter points for spans over 50'

Transverse Tendons
No Tendons in spans up to 50'
Midspan for spans over 50' & up to 75'
Outer quarter points for spans over 75'

Fabric Reinforcement shall be 10 gauge wire at 6 inches center to center in both the transverse and longitudinal direction. At splice the reinforcement shall lap 1'-0".

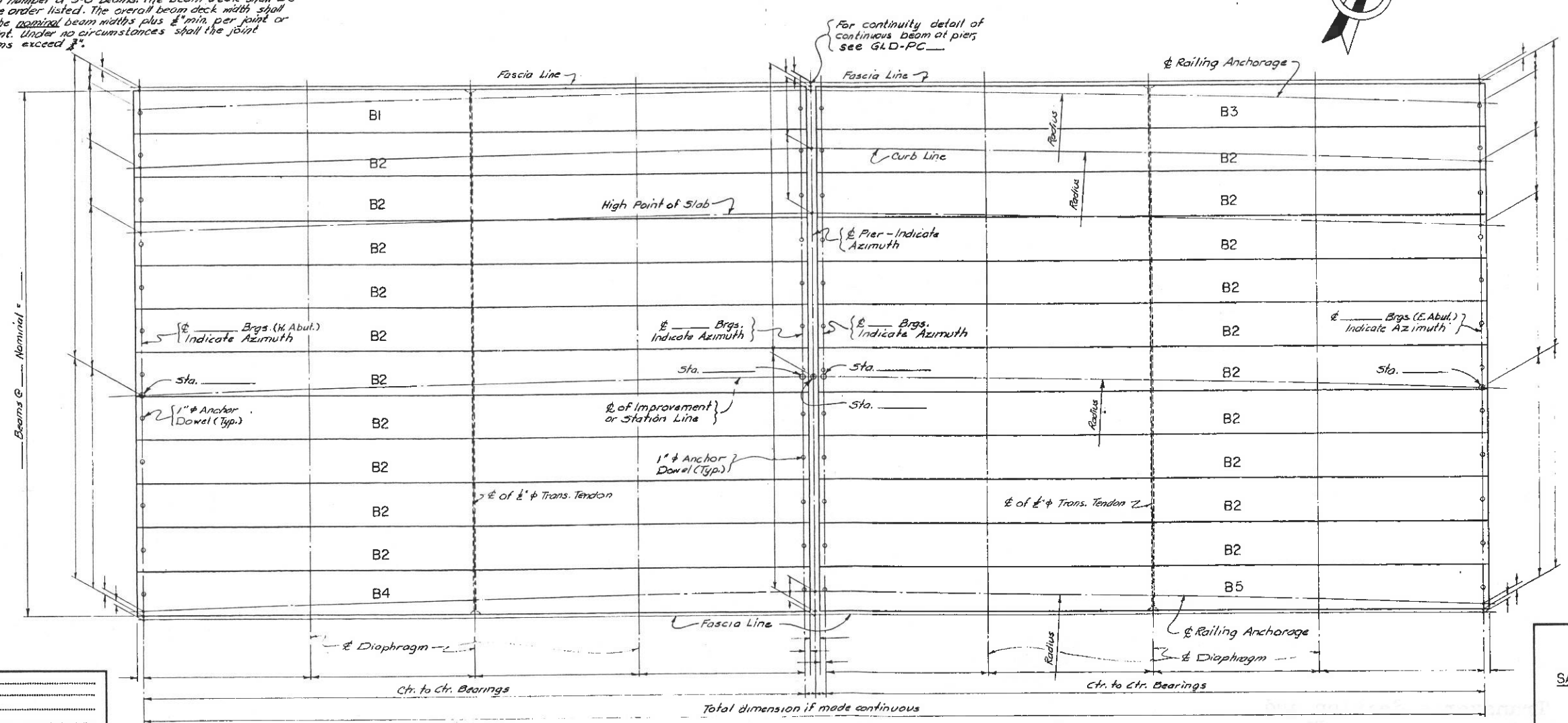

SUPERSTRUCTURE PLAN
Scale 3/16" = 1'-0"

Note:
Plan shown is for spans greater than 50' and less than 75'.

Notes:
Abutments and Pier not shown.

Notes:
For sidewalk details and railing anchorage details, see GLD-PC1
For continuity detail at pier for continuous structures, see GLD-PC6.

DATE MADE ....
PROJECT ENGINEER ....
IN CHARGE OF ....
DESIGNED BY ....
DESIGN CHECKED BY ....
DETAILED BY ....
DETAIL CHECKED BY ....

STATE OF NEW YORK
DEPARTMENT OF TRANSPORTATION
DIVISION OF CONSTRUCTION

SAMPLE DETAIL – SUPERSTRUCTURE

TRANSVERSE SECTION & SUPERSTRUCTURE PLAN

CONTINUOUS SPANS

DRAWING NO. GLD-PC2

REVISED JULY 1976

FED. RD. REG. NO.	STATE	FEDERAL AID PROJECT NO.	SHEET NO.	TOTAL SHEETS
	NEW YORK			

FOR USE AS A GUIDE ONLY

CAPITAL PROJECT IDENTIFICATION NO.

Designer/Detailer
For additional notes on diaphragms, transverse tendons and anchor dowels see GLD-PC5

Designer:
Include the additional weight of internal diaphragm in beam design. (Camber).

All reinforcement to be verified by designer

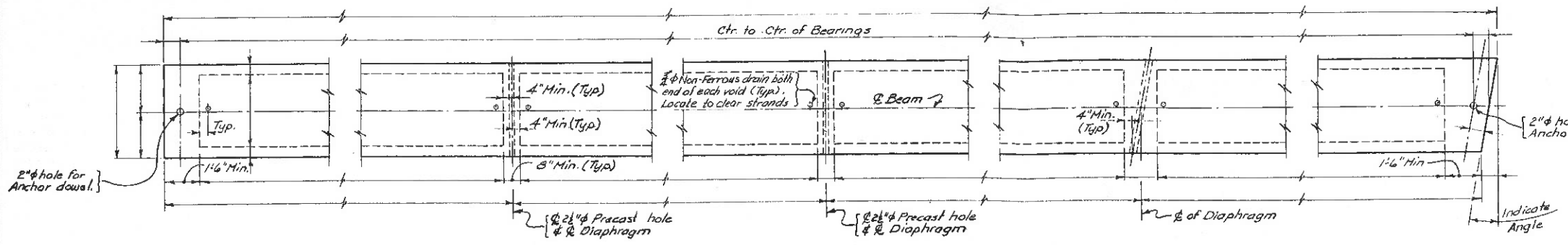

BEAM B2 PLAN
Scale 3/8" = 1'-0"

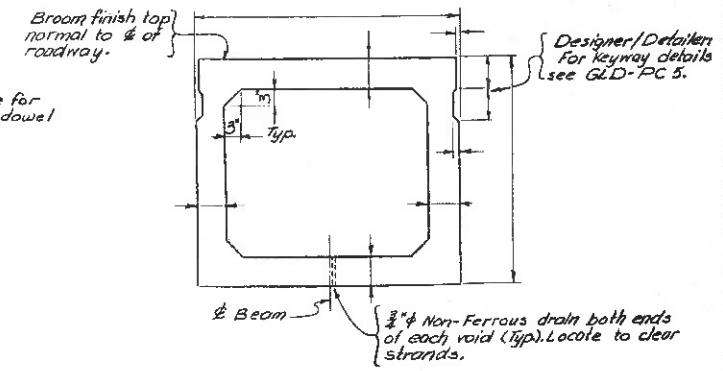

TYPICAL SECTION
Scale: 3/4" = 1'-0"

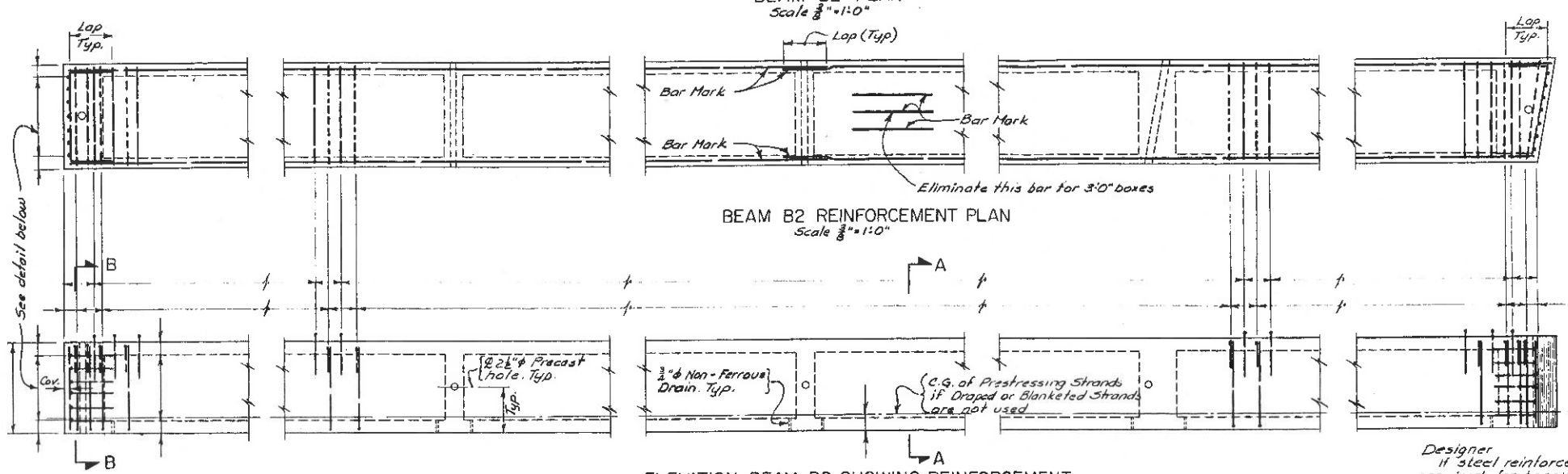

BEAM B2 REINFORCEMENT PLAN
Scale 3/8" = 1'-0"

ELEVATION BEAM B2 SHOWING REINFORCEMENT
Scale 3/8" = 1'-0"

Designer
If steel reinforcement is required for tension, place hook bars - See 'End Block Elevation' detail GLD-PC4.

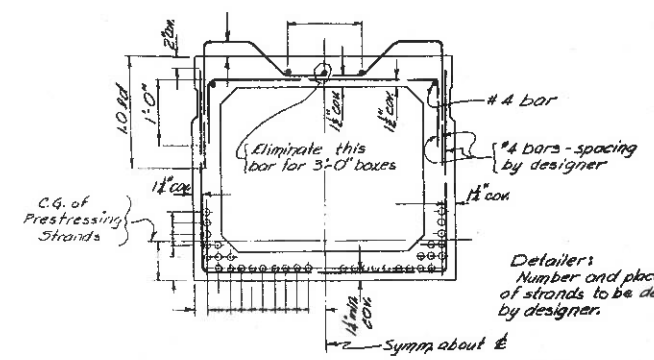

SECTION A-A
Scale: 3/4" = 1'-0"

Detailer:
Number and placement of strands to be determined by designer.

Detailer:
If draped strands are not used, Section B-B may not be necessary.

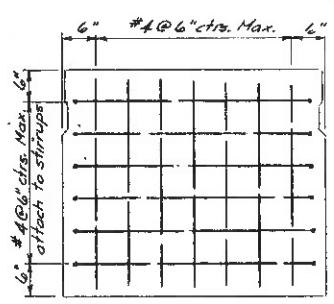

END BLOCK REINF.
Scale 3/4" = 1'-0"

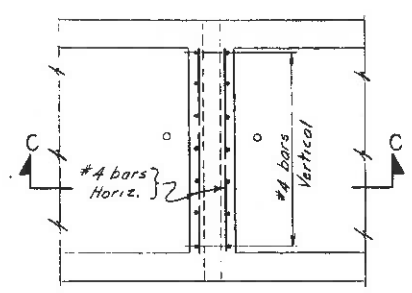

PLAN SECTION

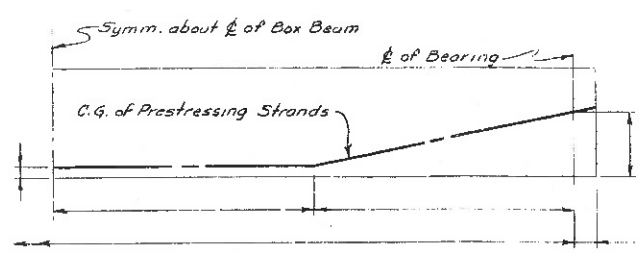

SCHEMATIC DETAIL FOR DRAPED STRANDS
Not to Scale

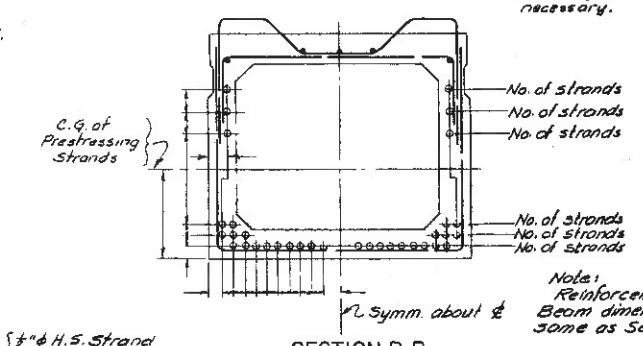

SECTION B-B
Scale 3/4" = 1'-0"

Note:
Reinforcement and Beam dimensions same as Section A-A.

Note:
For Box Beam Notes see GLD-PC4.

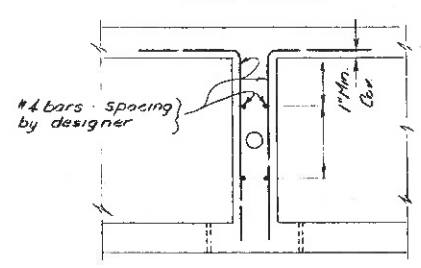

SECTION C-C
DIAPHRAGM DETAILS
Scale 3/4" = 1'-0"

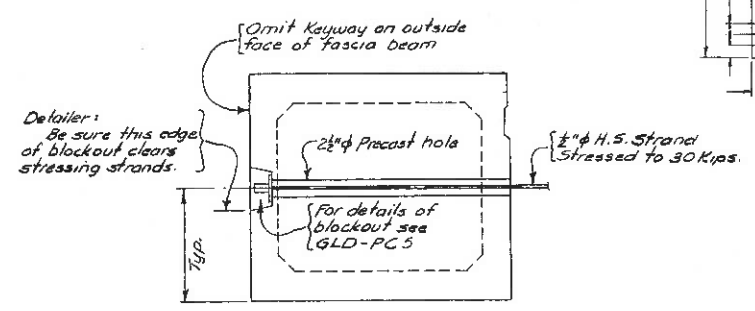

Note:
For location of 2½"φ precast hole and 1/2"φ H.S. strand refer to Superstructure Plan GLD-PC5

TRANS. TENDON LOCATION
(FASCIA BEAM ONLY)
Scale: 3/4" = 1'-0"

Designer/Detailer
The bar list for each prestressed beam shall be placed on that beam sheet.
All bar reinforcement embedded in or protruding from the prestressed beams shall be included in prestressed beam item.

DATE MADE
PROJECT ENGINEER
IN CHARGE OF
DESIGNED BY
DESIGN CHECKED BY
DETAILED BY
DETAIL CHECKED BY

STATE OF NEW YORK
DEPARTMENT OF TRANSPORTATION
DIVISION OF CONSTRUCTION

SAMPLE DETAIL — SUPERSTRUCTURE

PRESTRESSED CONCRETE
BOX BEAM DETAILS

SIMPLE SPANS

DRAWING NO. GLD-PC3

REVISED JULY 1976

FED. RD. REG. NO.	STATE	FEDERAL AID PROJECT NO.	SHEET NO.	TOTAL SHEETS
	NEW YORK			

FOR USE AS A GUIDE ONLY

CAPITAL PROJECT IDENTIFICATION NO.

All reinforcement to be verified by designer

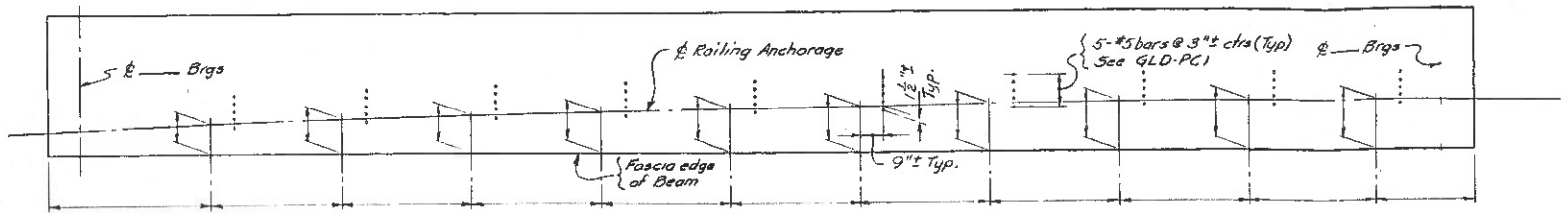

PLAN OF RAILING ANCHORAGE REINF.
(B4 SHOWN)
Not to Scale

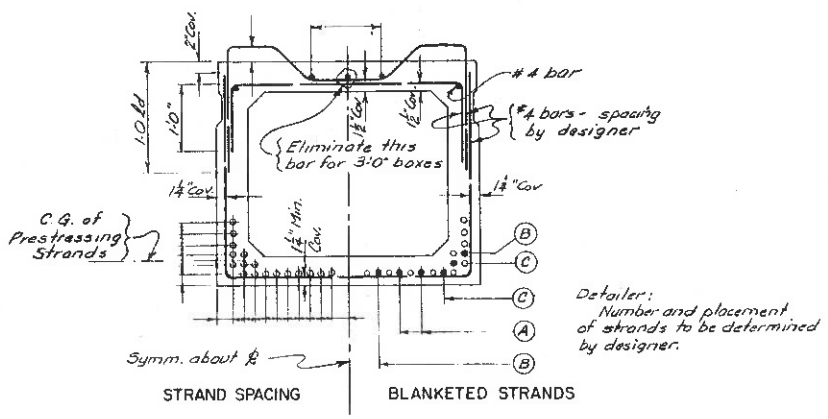

TYPICAL REINFORCEMENT
Scale 3/8"=1'-0"

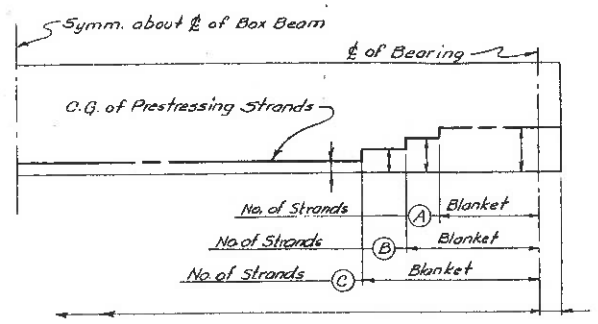

SCHEMATIC DETAIL FOR BLANKETED STRANDS
Not to Scale

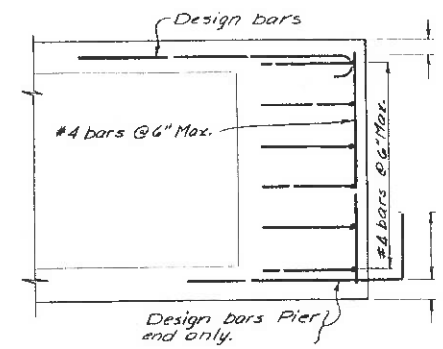

SIDE ELEVATION

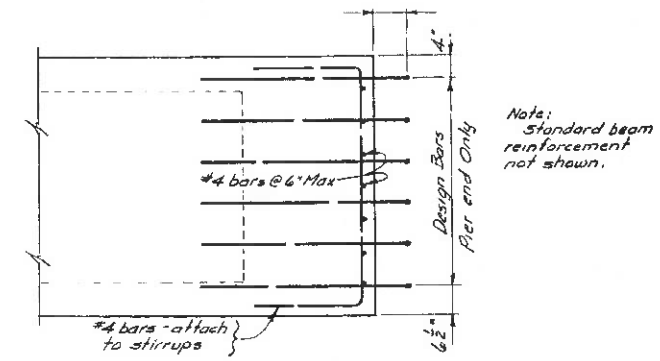

PLAN

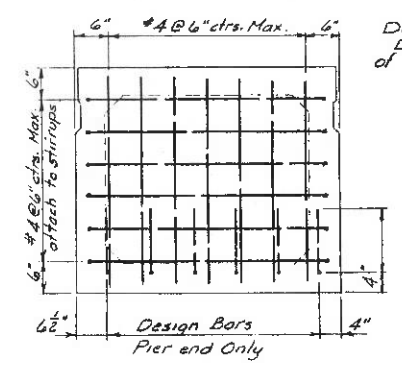

Designer: Design bars in top of beam not shown.

END ELEVATION

END BLOCK REINFORCEMENT
FOR CONTINUOUS BEAMS
Scale 3/8"=1'-0"

Designer: The designer shall position (vertically) the bottom row of strands to provide a minimum of clear concrete cover of 1" with the dapped area over bearings, see GLD-PC6. In order to provide concrete cover to the "U" stirrup rebar within the dapped area, the designer may position the "U" stirrup on top of the bottom row of strands if necessary.

If it should become necessary to raise the bottom row of strands to provide the necessary cover, the 2" strand grid pattern in the bottom flange shall be raised in 1" increments. If the strand group is raised, the designer shall analyze the beam with the revised prestress eccentricity and check the 1½" minimum strand concrete cover to the bottom of the void.

If the 1½" minimum strand concrete cover cannot be maintained contact Supervisor - Bridge Design Section or Concrete Component Sub-Unit.

The stirrup reinforcement in the end block area shall be placed at a 2½" ctr. to ctr. minimum spacing for a horizontal distance of approximately ¼ the beam depth with an equivalent bar area of 4% of the prestressing force.

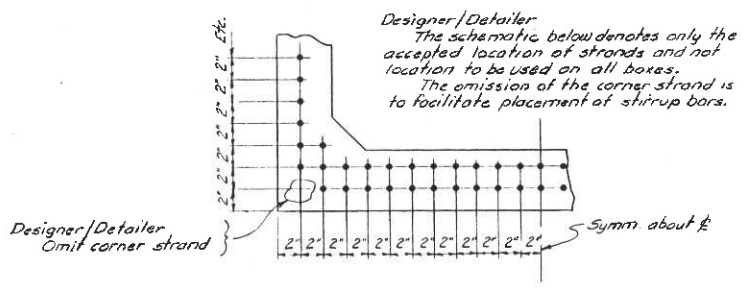

STRAND LOCATION SCHEMATIC
Scale 1½"=1'-0"

—NOTES—

The prestressing strands shall be ½ inch diameter with a guaranteed ultimate strength of 270 ksi.
Jacking force = ____ lbs per strand *
Required minimum concrete strength at transfer = ____ psi. Required minimum concrete strength at 28 days = ____ psi.
The allowable tension in the prestressed concrete units at transfer = ____ $\sqrt{f'ci}$ psi, at 28 day strength = ____ $\sqrt{f'c}$ psi.
Downward deflection under dead load (slab) ____.
Downward deflection under dead load (superimposed) ____
Upward camber at transfer due to prestress force and beam dead load.
All temporary inserts shall be approved by the Deputy Chief Engineer (Structures) and detailed on the prestressed concrete "Working Drawings."
Bar reinforcement shall be ASTM A615, Grade 40, except where design requires grade 60.

The tops of prestressed units shall receive a stiff wire rake finish.
The transverse tendons shall be ½" diameter strand with a guaranteed ultimate strength of 270 ksi. The transverse tendons shall be polystrand, galvanized strand or equal and shall be tensioned to a force of 30,000 lbs.

Designer: * Force shall be to the nearest 100# and the same for all prestressed units in a bridge, when possible.

Notes: For additional information on continuous beams see GLD-PC6.

DATE MADE .....
PROJECT ENGINEER .....
IN CHARGE OF .....
DESIGNED BY .....
DESIGN CHECKED BY .....
DETAILED BY .....
DETAIL CHECKED BY .....

STATE OF NEW YORK
DEPARTMENT OF TRANSPORTATION
DIVISION OF CONSTRUCTION

SAMPLE DETAIL — SUPERSTRUCTURE

PRESTRESSED CONCRETE BOX BEAM DETAILS CONT.

SIMPLE SPANS
CONTINUOUS SPANS

DRAWING NO. GLD-PC4

REVISED JULY 1976

FED. RD. REG. NO.	STATE	FEDERAL AID PROJECT NO.	SHEET NO.	TOTAL SHEETS
	NEW YORK			

FOR USE AS A GUIDE ONLY

CAPITAL PROJECT IDENTIFICATION NO.

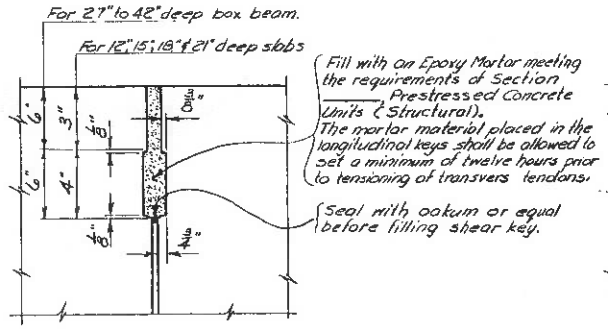

SHEAR KEY DETAIL
Scale 1½"=1'-0"

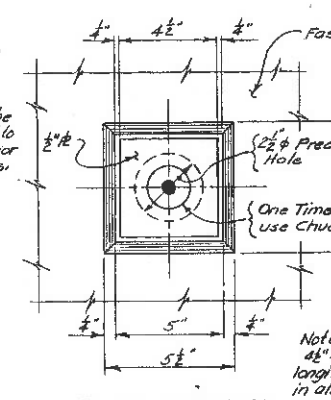

FASCIA ELEVATION

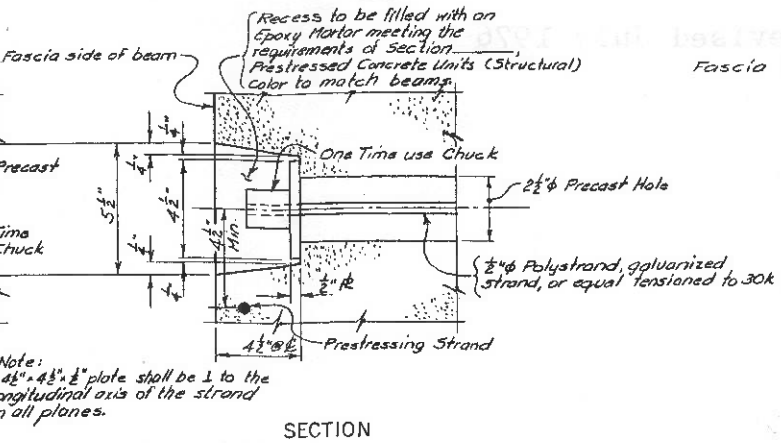

SECTION

TRANSVERSE TENDON RECESS DETAILS
Scale 3"=1'-0"

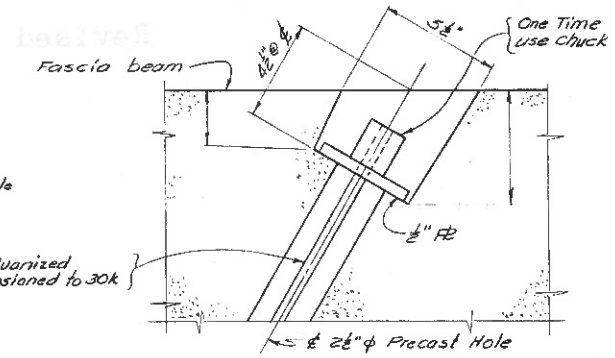

PLAN

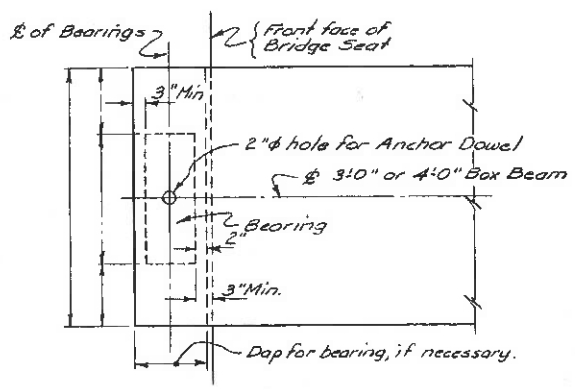

NO SKEW

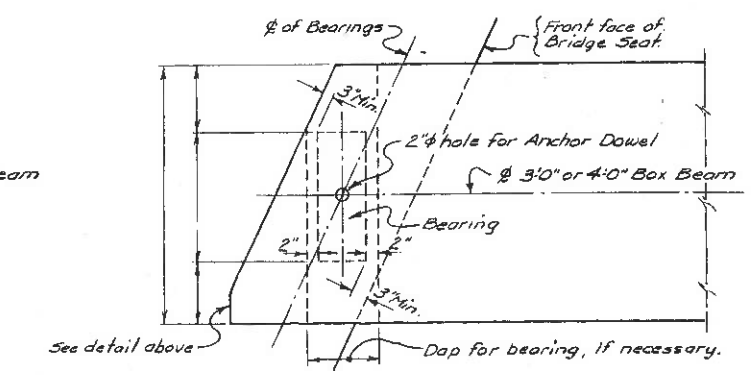

SKEWED

BEARING PLACEMENT DETAILS
Scale ¾"=1'-0"

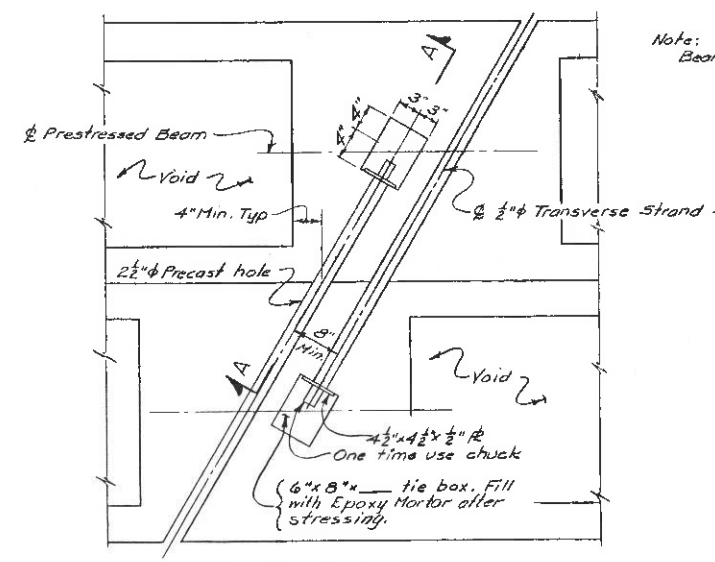

PARTIAL PLAN

Note:
Beam reinforcement not shown.

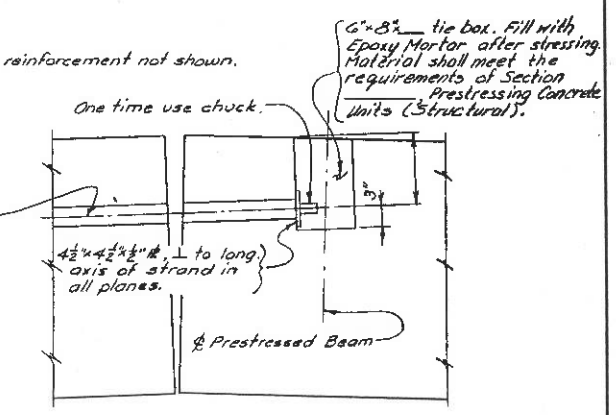

TIE BOX DETAIL
Scale 1"=1'-0"

SECTION A-A

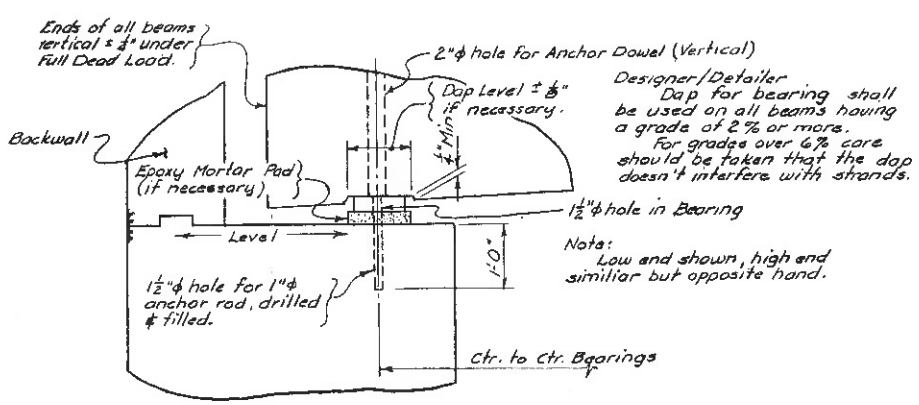

RECESS FOR BEARING PAD DETAIL
Scale ¾"=1'-0"

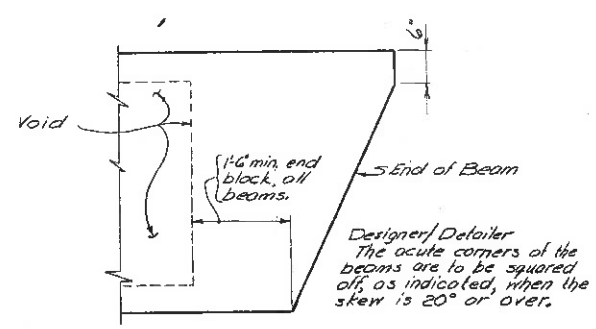

BEAM END DETAIL-SKEW 20° & OVER
Scale: ¾"=1'-0"

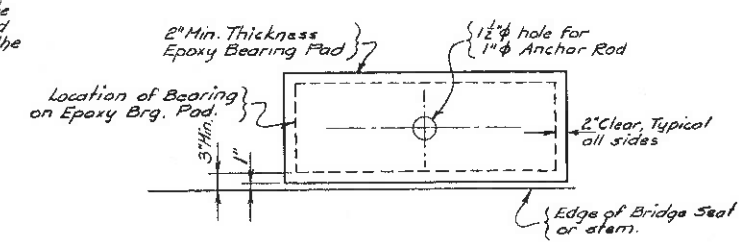

EPOXY BEARING PAD DETAIL
Not to Scale

This area reserved for notes

DATE MADE
PROJECT ENGINEER
IN CHARGE OF
DESIGNED BY
DESIGN CHECKED BY
DETAILED BY
DETAIL CHECKED BY

STATE OF NEW YORK
DEPARTMENT OF TRANSPORTATION
DIVISION OF CONSTRUCTION

SAMPLE DETAIL — SUPERSTRUCTURE

MISCELLANEOUS DETAILS FOR PRESTRESSED CONCRETE BOXES

DRAWING NO. GLD-PC5

REVISED JULY 1976

FED. RD. REG. NO.	STATE	FEDERAL AID PROJECT NO.	SHEET NO.	TOTAL SHEETS
	NEW YORK			

FOR USE AS A GUIDE ONLY

CAPITAL PROJECT IDENTIFICATION NO.

Note:
In the three partial plans below the backwall header, joint system and slab are not shown.

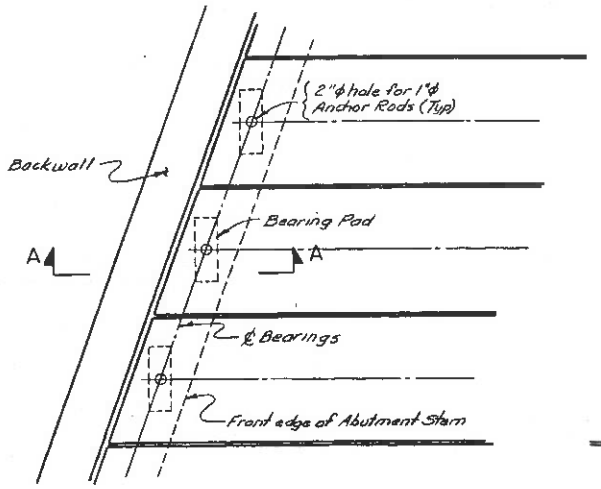

PARTIAL PLAN
AT ABUTMENT
SIMPLE & CONTINUOUS SPANS
Scale 3/8"=1'-0"

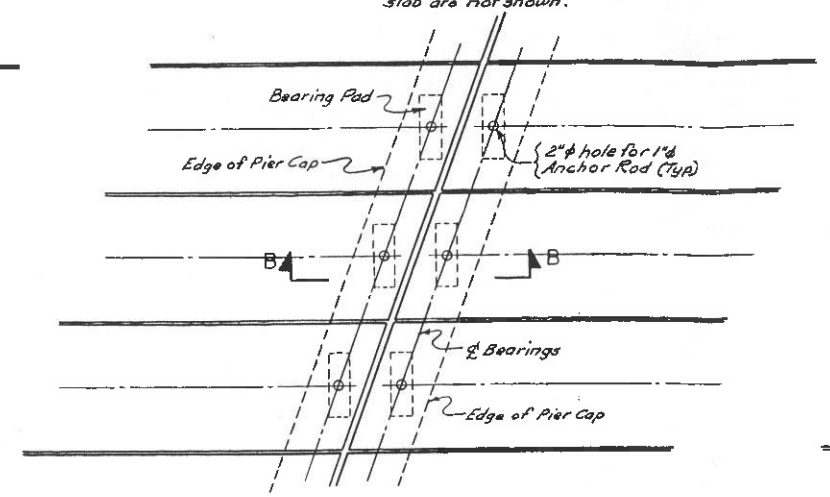

PARTIAL PLAN
AT PIER
SIMPLE SPANS
Scale 3/8"=1'-0"

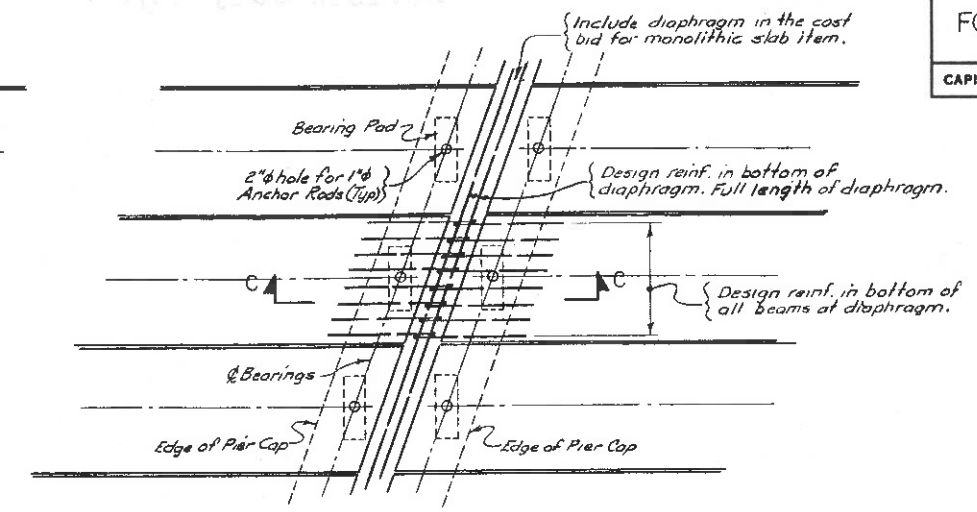

PARTIAL PLAN
AT PIER
CONTINUOUS SPANS
Scale 3/8"=1'-0"

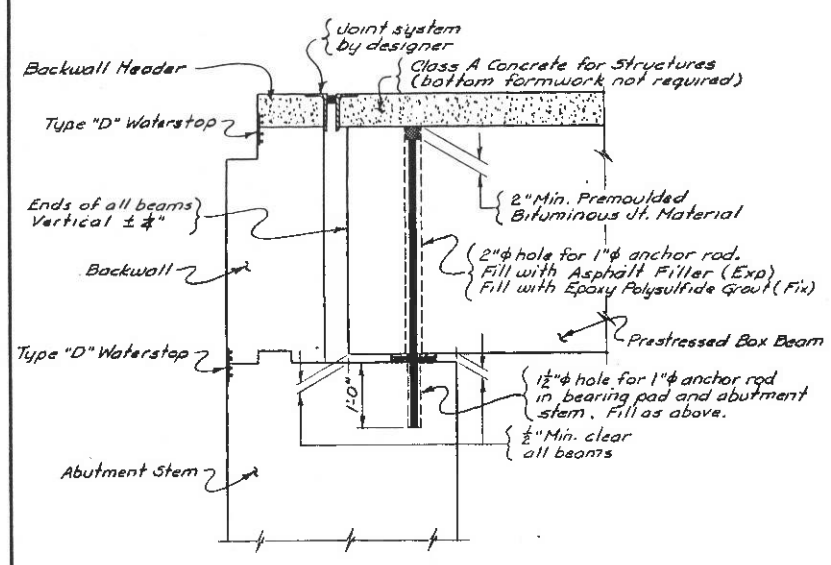

SECTION A-A
Scale 1/4"=1'-0"

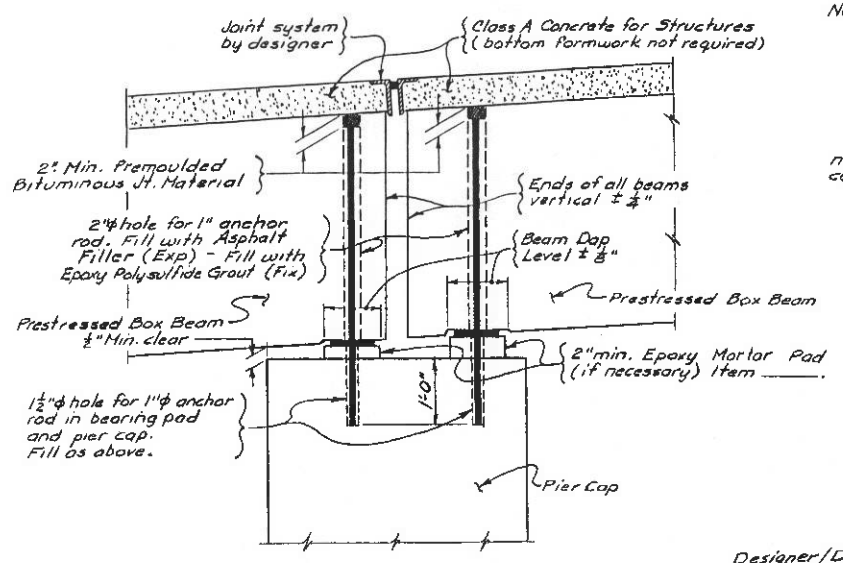

SECTION B-B
Scale 1/4"=1'-0"

Note:
Monolithic slab reinf. not shown.

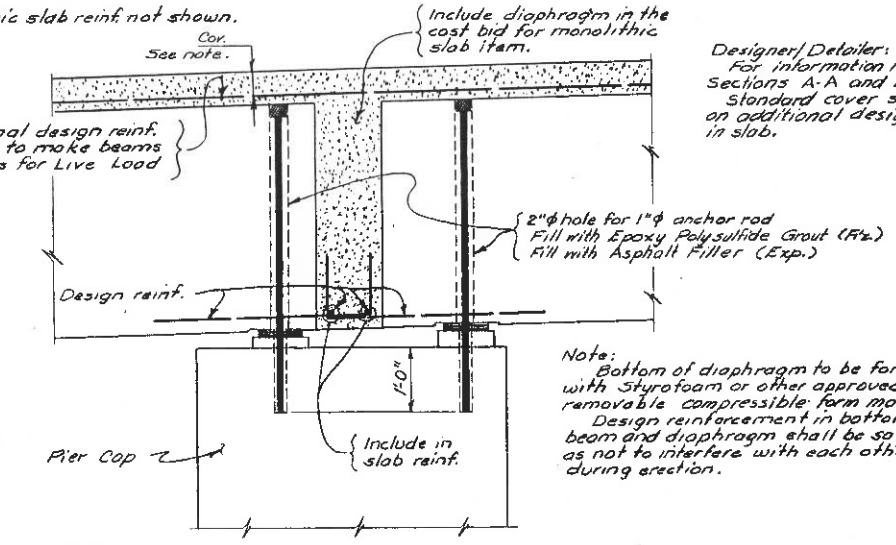

SECTION C-C
Scale 1/4"=1'-0"

Designer/Detailer:
For information not shown see Sections A-A and B-B this sheet.
Standard cover shall be maintained on additional design reinforcement in slab.

Note:
Bottom of diaphragm to be formed with Styrofoam or other approved non-removable compressible form material.
Design reinforcement in bottom of beam and diaphragm shall be so placed as not to interfere with each other during erection.

Designer/Detailer:
The ends of all beams shall follow skew.
Beams having a grade of 2% or greater shall be, dapped level ± 1/8" in bearing area.
Anchor rod holes in beams shall be 2"ϕ holes for expansion up to 300'.

Notes:
Premoulded Bit. Jt. Material shall meet the requirements of ____ and be paid for under Bearing Item.
The ends of beams and anchor rod holes shall be made vertical ± 1/4".
Anchor rods to be paid for under Bearing Item.
Epoxy Polysulfide Grout to meet the requirements of ____ and be paid for under Bearing Item.
Asphalt Filler to meet the requirements of ____ and paid for under Bearing Item.

DATE MADE.....
PROJECT ENGINEER.....
IN CHARGE OF.....
DESIGNED BY.....
DESIGN CHECKED BY.....
DETAILED BY.....
DETAIL CHECKED BY.....

STATE OF NEW YORK
DEPARTMENT OF TRANSPORTATION
DIVISION OF CONSTRUCTION

SAMPLE DETAIL — SUPERSTRUCTURE

BEAM END & ANCHOR ROD DETAILS

SIMPLE SPANS
CONTINUOUS SPANS

DRAWING NO. GLD-PC6

REVISED JULY 1976

FED. RD. REG. NO.	STATE	FEDERAL AID PROJECT NO.	SHEET NO.	TOTAL SHEETS
	NEW YORK			

FOR USE AS A GUIDE ONLY

CAPITAL PROJECT IDENTIFICATION NO.

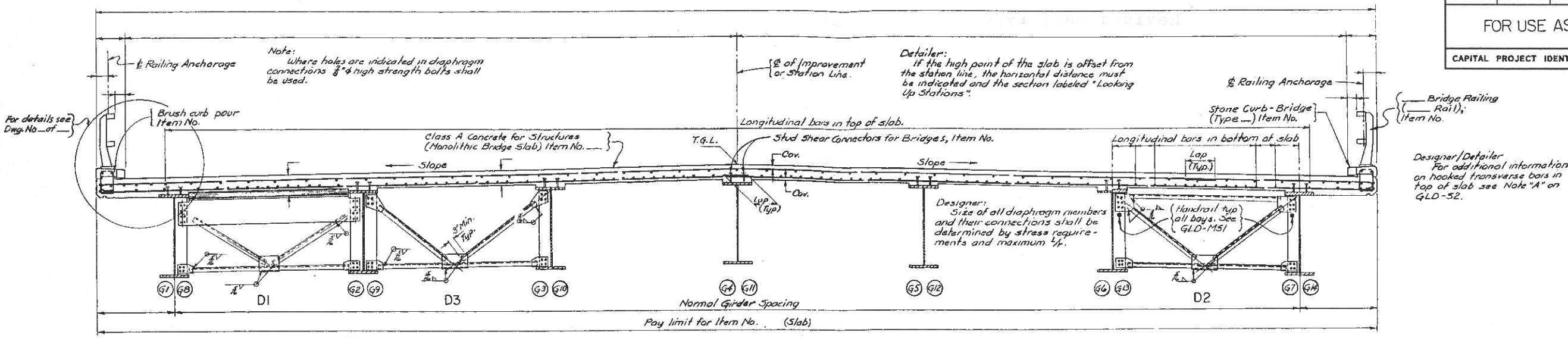

Detailer: All reinforcement to be verified by designer.

TRANSVERSE SECTION
Scale ⅜"=1'-0"

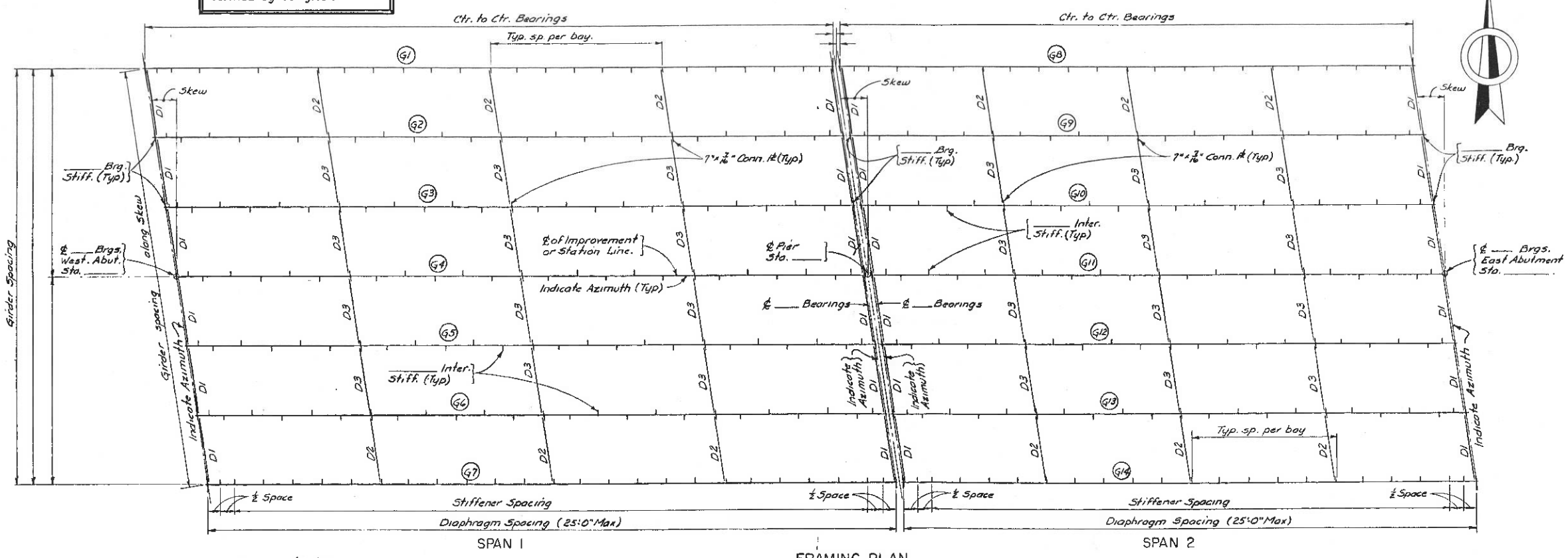

FRAMING PLAN
Scale ⅜"=1'-0"

Designer/Detailer: Please note that for Skews 30° or under the Diaphragms are placed parallel to the Skew.

Notes:
If any utilities are to be carried on the bridge they should be kept above the bottom flange of the Girder.
All curbs are to be Granite.
For curb details see GLD-MC1.
For information on Jacking Diaphragms consult "Standard Details for Highway Bridges."

For Girder Details see GLD-G1
For additional details of diaphragms see appropriate BDD Sheet.
For Fascia Drip Detail see GLD-PC

If all azimuths of ℄ of bearings and skew angles are the same, only show one angle and one azimuth, labeled typical.

DATE MADE
PROJECT ENGINEER
IN CHARGE OF
DESIGNED BY
DESIGN CHECKED BY
DETAILED BY
DETAIL CHECKED BY

STATE OF NEW YORK
DEPARTMENT OF TRANSPORTATION
DIVISION OF CONSTRUCTION

SAMPLE DETAIL-SUPERSTRUCTURE

TRANSVERSE SECTION
FRAMING PLAN
FOR SKEW 30° & UNDER

SIMPLE SPANS — DRAWING NO. GLD-S1

REVISED JULY 1976

FED. RD. REG. NO.	STATE	FEDERAL AID PROJECT NO.	SHEET NO.	TOTAL SHEETS
	NEW YORK			

FOR USE AS A GUIDE ONLY

CAPITAL PROJECT IDENTIFICATION NO.

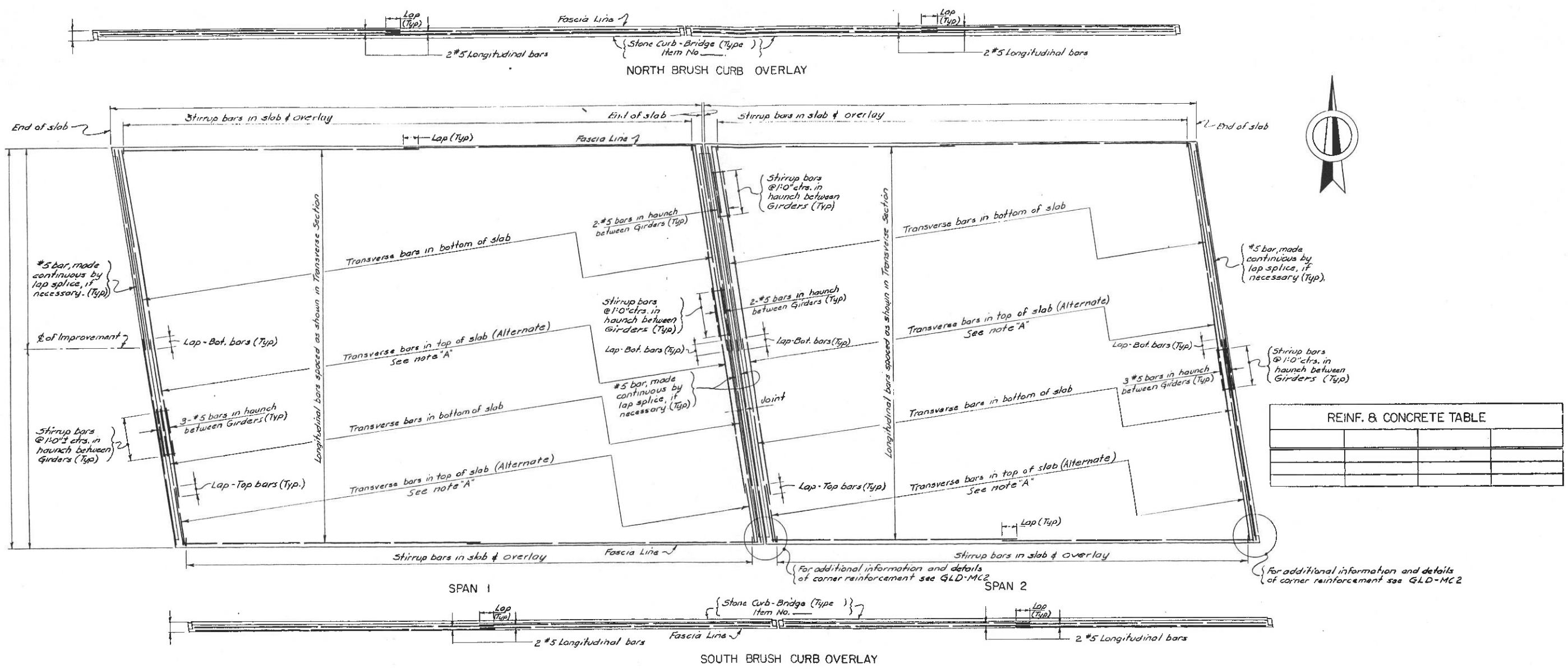

SLAB REINFORCEMENT PLAN
Scale $\frac{1}{8}$" = 1'-0"

REINF. & CONCRETE TABLE			

Notes:
For additional details of Haunch Stirrups see GLD-MC1.

NOTE "A"

Bars for slab reinforcement:
1. Maximum length of bar with hook on each end shall be limited to 30'-0" including hooks.
2. Maximum length of bar with a hook on one end shall be limited to 60'-0" including hook.
3. When a length of bar having hooks at each end is greater than 30'-0" it shall be attained by lapping two bars with a hook on one end. Top bars shall be lapped midway between girders. Laps shall be alternated.

DATE MADE
PROJECT ENGINEER
IN CHARGE OF
DESIGNED BY
DESIGN CHECKED BY
DETAILED BY
DETAIL CHECKED BY

STATE OF NEW YORK
DEPARTMENT OF TRANSPORTATION
DIVISION OF CONSTRUCTION

SAMPLE DETAIL — SUPERSTRUCTURE

SLAB REINFORCEMENT

FOR SKEW 30° & UNDER

SIMPLE SPANS

DRAWING NO. GLD-S2

REVISED JULY 1976

FED. RD. REG. NO.	STATE	FEDERAL AID PROJECT NO.	SHEET NO.	TOTAL SHEETS
	NEW YORK			

FOR USE AS A GUIDE ONLY

CAPITAL PROJECT IDENTIFICATION NO.

LEGEND

(G4) Indicates Girder Number

D2-Indicates type of diaphragm used.

Detailer: When design calls for vertical stiffener plates see GLD-G6 and GLD-S1 for proper method of detailing.

Bottom laterals to be used when distance between ℄ of Bearings and D.L. Contraflexure Point is more than 125'-0".

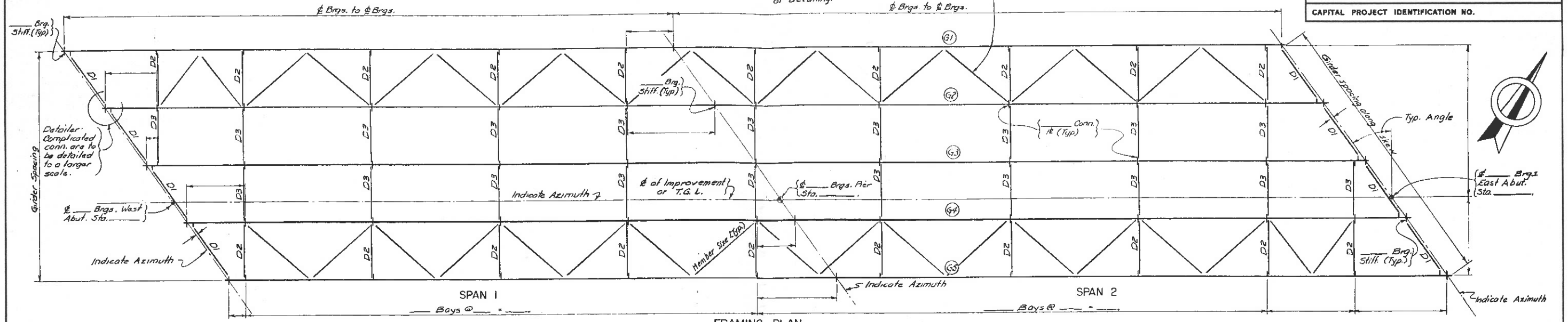

FRAMING PLAN

Scale 1/8" = 1'-0"

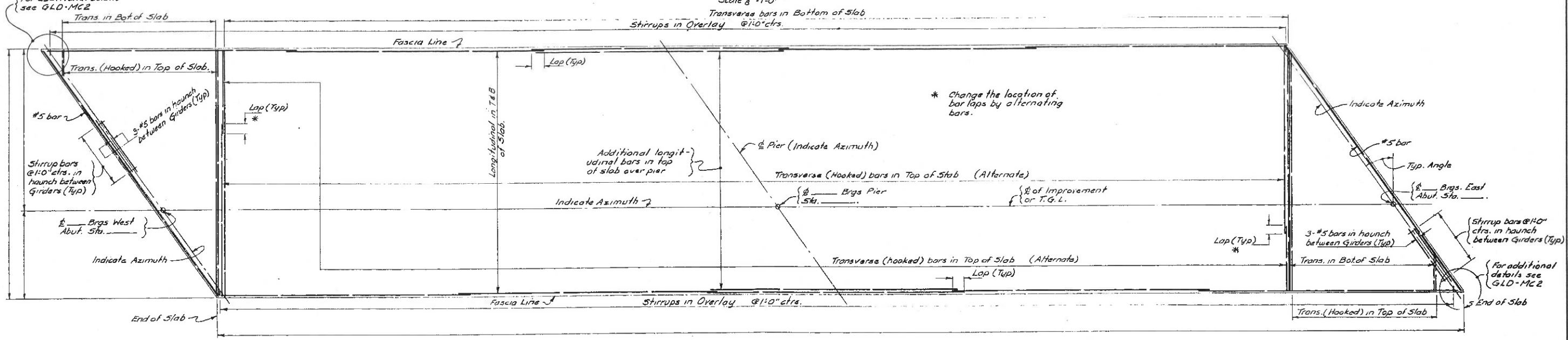

BRUSH CURB OVERLAY —— (NORTH OVERLAY SIMILAR)

SLAB REINFORCEMENT PLAN

Scale 1/8" = 1'-0"

Notes:

For additional details of Haunch Stirrups see GLD-MC1.

For additional information on hooked bars in top of slab see NOTE "A" on GLD-S2.

CONCRETE TABLE			

DATE MADE .....
PROJECT ENGINEER .....
IN CHARGE OF .....
DESIGNED BY .....
DESIGN CHECKED BY .....
DETAILED BY .....
DETAIL CHECKED BY .....

STATE OF NEW YORK
DEPARTMENT OF TRANSPORTATION
DIVISION OF CONSTRUCTION

SAMPLE DETAIL—SUPERSTRUCTURE

FRAMING PLAN & SLAB REINFORCEMENT

FOR SKEWS OVER 30°

CONTINUOUS SPANS

DRAWING NO. GLD-S3

REVISED JULY 1976

FED. RD. REG. NO.	STATE	FEDERAL AID PROJECT NO.	SHEET NO.	TOTAL SHEETS
	NEW YORK			

FOR USE AS A GUIDE ONLY

CAPITAL PROJECT IDENTIFICATION NO.

Designer/Detailer:
Shoulders on high side where distance from edge of travel lane to face of curb is less than 5'6", place on same slope as that required for banking of the travel lanes.
Shoulders on high side where distance from edge of travel lane to face of curb is 5'6" or greater, the required banking of the travel lanes shall be extended for a distance of 2'-0" beyond the edge of travel lane and then continued on a down slope of ¾" per foot.

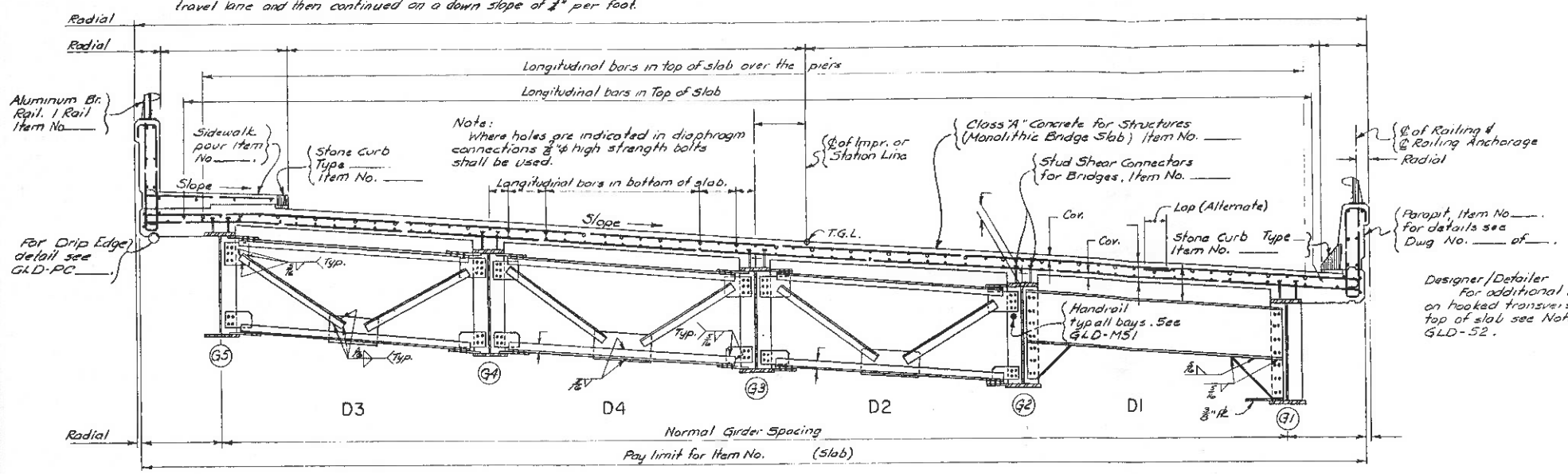

Designer/Detailer
For additional information on hooked transverse bars in top of slab see Note "A" on GLD-52.

Designer:
Size of all diaphragm members and their connections shall be determined by stress requirements and maximum L/r.

TRANSVERSE SECTION
"Looking Up Stations"
Scale ⅜" = 1'-0"

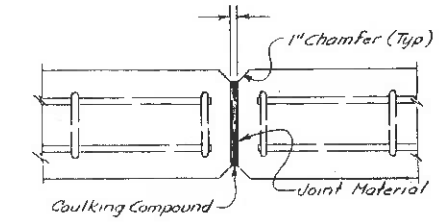

DETAIL "A"
Scale 1½" = 1'-0"

Detailer:
All reinforcement to be verified by designer.

Detailer:
The exact pouring sequence shall be provided by designer. The diagram shown is for illustration only.

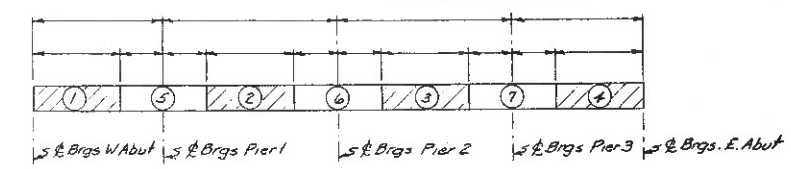

SUGGESTED POURING SEQUENCE
Not to Scale

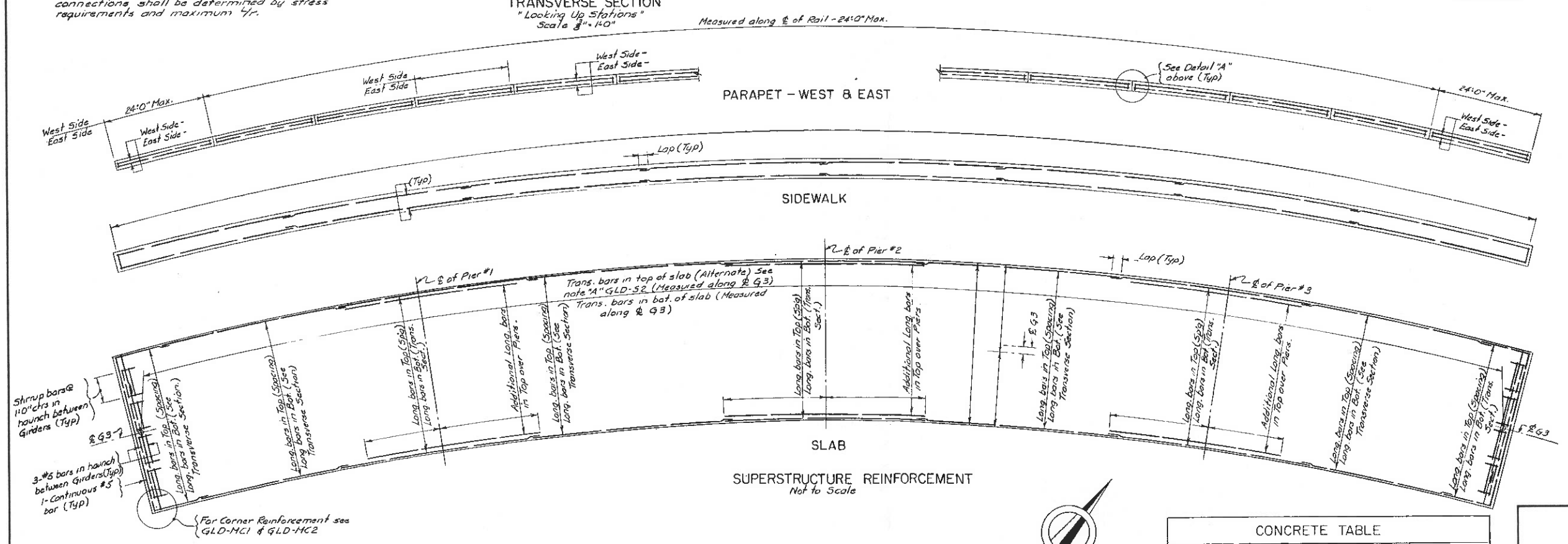

SUPERSTRUCTURE REINFORCEMENT
Not to Scale

Notes:
Recess for joint material at end of slab not shown.
For reinforcement in corner of slab and end haunch details see GLD-MC1 & GLD-MC2.
For addition information on diaphragms see appropriate BDD Sheet.
All curbs are to be granite.
For Framing Plan and additional details see GLD-G6

CONCRETE TABLE

DATE MADE
PROJECT ENGINEER
IN CHARGE OF
DESIGNED BY
DESIGN CHECKED BY
DETAILED BY
DETAIL CHECKED BY

STATE OF NEW YORK
DEPARTMENT OF TRANSPORTATION
DIVISION OF CONSTRUCTION

SAMPLE DETAIL - SUPERSTRUCTURE
TRANSVERSE SECTION & SLAB REINFORCEMENT
CURVED STRUCTURE

CONTINUOUS SPANS

DRAWING NO. GLD-S4

REVISED JULY 1976